CE EMC
TEST REPORT

for

Product: Window Cleaning Robot
Model: DDC55PRO
Report No.: PTC25090216002E-EM01

Issued for

BeijingHuttWisdomTechnologyCo.,Ltd
432#, Fourth floor, building 12,8# of XinjiekouWai Street, Xichengdistrict, Beijing city, China

Issued by

Precise Testing & Certification (Guangdong) Co., Ltd.
Building 1, No. 6, Tongxin Road, Dongcheng Street, Dongguan, Guangdong, China.
TEL: +86-769-3880 8222
FAX: + 86-769-3882 6111

Note: This report shall not be reproduced except in full, without the written approval of Precise Testing & Certification (Guangdong) Co., Ltd.This document may be altered or revised by Precise Testing & Certification (Guangdong) Co., Ltd.personnel only, and shall be noted in the revision section of the document. The test results presented in this report only relate to the tested sample.

TABLE OF CONTENTS

1. TEST CERTIFICATION 3
2. TEST SUMMARY 4
3. TEST SITE 5
3.1. TEST FACILITY 5
3.2. Measurement Uncertainty 5
3.3. DECISION RULE 6
3.4. LIST OF TEST AND MEASUREMENT INSTRUMENTS 6
4. EUT DESCRIPTION 10
5. TEST METHODOLOGY 11
5.1. TEST MODE 11
5.2. EUT SYSTEM OPERATION 11
6. SETUP OF EQUIPMENT UNDER TEST 12
6.1. DESCRIPTION OF SUPPORT UNITS 12
6.2. CONFIGURATION OF SYSTEM UNDER TEST 12
7. EMISSION TEST 13
7.1. CONDUCTED EMISSION MEASUREMENT 13
7.2. CLICK MEASUREMENT 17
7.3. DISTURBANCE POWER MEASUREMENT 19
7.4. RADIATED EMISSION MEASUREMENT 21
7.5. HARMONICS CURRENT MEASUREMENT 28
8. IMMUNITY TEST 34
8.1. GENERAL DESCRIPTION 34
8.2. GENERAL PERFORMANCE CRITERIA DESCRIPTION 35
8.3. ELECTROSTATIC DISCHARGE (ESD) 36
8.4. RADIATED RADIO-FREQUENCY, ELECTROMAGNETIC FIELD (RS) 39
8.5. ELECTRICAL FAST TRANSIENT (EFT) 42
8.6. SURGE IMMUNITY TEST 44
8.7. CONDUCTED RADIO FREQUENCY DISTURBANCES (CS) 46
8.8. VOLTAGE DIP & VOLTAGE INTERRUPTIONS 48
9. PHOTOGRAPHS OF THE TEST CONFIGURATION 50
10. PHOTOGRAPHS OF EUT 56

1. TEST CERTIFICATION

Product:	Window Cleaning Robot
Model:	DDC55PRO
Applicant :	BeijingHuttWisdomTechnologyCo.,Ltd
Address:	432#, Fourth floor, building 12,8# of XinjiekouWai Street, Xichengdistrict, Beijing city, China
Manufacturer:	BeijingHuttWisdomTechnologyCo.,Ltd
Address:	432#, Fourth floor, building 12,8# of XinjiekouWai Street, Xichengdistrict, Beijing city, China
Factory:	BeijingHuttWisdomTechnologyCo.,Ltd
Address:	432#, Fourth floor, building 12,8# of XinjiekouWai Street, Xichengdistrict, Beijing city, China
Test Date:	October 16,2025 to October 23,2025
Issued Date:	November 14,2025
Test Voltage:	AC 230V/50Hz
Applicable Standards:	EMC Directive 2014/30/EU EN IEC 55014-1:2021 EN IEC 55014-2:2021 EN IEC 61000-3-2:2019+A1:2021+A2:2024 EN 61000-3-3:2013+A1:2019+A2:2021

The above equipment has been tested by Precise Testing & Certification (Guangdong) Co., Ltd. and found compliance with the requirements in the technical standards mentioned above. The test results presented in this report only relate to the product/system tested. The Other similar equipment will not necessarily produce the same results due to production tolerance and measurement uncertainties.

Test Engineer: Jack zho / Engineer

Technical Manager: Simon Pu / Manager

2. TEST SUMMARY

EMISSION			
Standard	**Item**	**Result**	**Remarks**
EN IEC 55014-1: 2021	Conducted (Main Port)	PASS	Complied with limit
	Disturbance Power	N/A	N/A
	Radiated Emission	PASS	Complied with limit
	Click	N/A	N/A
EN IEC 61000-3-2:2019+A1:2021+A2 :2024	Harmonic current emissions	PASS	Complied with limit
EN 61000-3-3:2013+A1:2019+A2 :2021	Voltage fluctuations & flicker	PASS	Complied with limit

IMMUNITY			
Standard	**Item**	**Result**	**Remarks**
IEC 61000-4-2:2008	ESD	PASS	Complied with the requirements
IEC 61000-4-3:2006+ A1:2007+A2:2010	RS	PASS	Complied with the requirements
IEC 61000-4-4:2012	EFT	PASS	Complied with the requirements
IEC 61000-4-5:2014+A1:2017	Surge	PASS	Complied with the requirements
IEC 61000-4-6:2013	CS	PASS	Complied with the requirements
IEC 61000-4-11:2020	Voltage dips & voltage variations	PASS	Complied with the requirements

Note: 1) The test result verdict is decided by the limit of test standard.

2) The information of measurement uncertainty is available upon the customer's request.

3. TEST SITE

3.1. TEST FACILITY

Other items:

Precise Testing & Certification (Guangdong) Co., Ltd.

Address: Building 1, No. 6, Tongxin Road, Dongcheng Street, Dongguan, Guangdong, China.

☆ CNAS Registration No.: CNAS L5772

☆ FCC Registration No.: 790290

☆ A2LA Certificate No.: 4408.01

☆ IC Registration No.: 12191A

Click item:

Zhejiang Fangzheng Quality Testing & Inspection of Household Electric Appliances Co., Ltd.

Address:6/F., Building 2, & 1/F., Building 1B, Aidi Kechuang Park, No.246, Wenyuan North Road, Xiasha Street, Qiantang New District, Hangzhou, Zhejiang, China

☆ CNAS Registration No.:CNAS L0333

3.2. Measurement Uncertainty

Parameter	U_{lab}	U_{cispr}
Temperature	±1° C	-
Humidity	±5%	-
DC and Low Frequency Voltages	±3%	-
Conducted Emission(9KHz-150KHz)	±3.60dB	±3.80dB
Conducted Emission(9KHz-30MHz)	±3.60dB	±3.40dB
Conducted Emission(Control port)	±3.46dB	±5.00dB
Disturbance Power	±3.68dB	±4.50dB
Loop	±4.02dB	±3.30dB
Radiated Emission(30MHz-1GHz)	±4.76dB	±6.30dB
Radiated Emission (1GHz-6GHz)	±4.44dB	±5.20dB
Radiated Emission (6GHz-18GHz)	±4.44dB	±5.50dB

Note 1: This uncertainty represents an expanded uncertainty expressed at approximately

the 95% confidence level using a coverage factor of k=2.

3.3. DECISION RULE

1. This uncertainty represents an expanded uncertainty expressed at approximately the 95% confidence level using a coverage factor of k=2.
2. The Ulab is less than Ucispr, compliance is deemed to occur if no measured disturbance level exceeds the disturbance limit;non-compliance is deemed to occur if any measured disturbance level exceeds the disturbance limit.
3. For conducted emission test of laboratory have a measurement uncertainty greater than that specified in harmonized standard, this equipment can still be used provided that an adjustment is made follows： any additionan uncertaimty in the test system over and above that specified in harmonized standard should be used to tighter the test requirements-making the test harder to pass. This procedure will ensure that a test system not comliant with harmonized standard does not increase the probability of passing a EUT that would otherwise have failed a test if a test system comliant with harmonized standard had been used.

3.4. LIST OF TEST AND MEASUREMENT INSTRUMENTS

3.4.1. For conducted emission at the mains terminals test

Name of Equipment	Manufacturer	Model	Serial No.	Last Cal.	Calibration Interval
EMI Test Receiver	Rohde&Schwarz	ESCI3	101417	Aug. 14,2025	1 Year
Artificial Mains Network	Rohde&Schwarz	ENV216	101342	Aug. 14,2025	1 Year
ISN	Rohde&Schwarz	ENY81	100118	Aug. 14,2025	1 Year
ISN	Rohde&Schwarz	NTFM8158	00252	Aug. 14,2025	1 Year
Test S/W	Tonscend	JS32-CE/4.0.0.3			

3.4.2. For click test (FZT)

Name of Equipment	Manufacturer	Model	Serial No.	Last Cal.	Calibration Interval
Click Tester	SCHAFFNER	DIA_1512D	E002-9	Aug. 14,2025	1 Year
Artificial Mains Network	Rohde&Schwarz	ENV216	FZT-E002-02	Aug. 14,2025	1 Year
Test S/W	SCHAFFNER	DIA 2.5.0.0			

3.4.3. For disturbance power test

Name of Equipment	Manufacturer	Model	Serial No.	Last Cal.	Calibration Interval
EMI Test Receiver	Rohde&Schwarz	ESCI3	101417	Aug. 14,2025	1 Year
Absorbing Clamp	LUTHI	MDS 21B	P1407131815	Aug. 14,2025	1 Year
Test S/W	Tonscend	JS32-CE/4.0.0.3			

3.4.4. For radiated emission test (30MHz-1GHz)

Name of Equipment	Manufacturer	Model	Serial No.	Last Cal.	Calibration Interval
EMI Test Receiver	Rohde&Schwarz	ESPI7	101671	Aug. 14,2025	1 Year
Bilog Antenna	SCHWARZBECK	VULB 9160	9160-3355	Aug. 14,2025	1 Year
Preamplifier (low frequency)	SCHWARZBECK	BBV 9745	9745-0013	Aug. 14,2025	1 Year
Test S/W	Tonscend	JS32-RE/4.0.0.0			

3.4.5. For radiated emission test (1GHz above)

Name of Equipment	Manufacturer	Model	Serial No.	Last Cal.	Calibration Interval
Spectrum Analyzer	Rohde&Schwarz	FSVR40	6625-01-588-5515	Aug. 14,2025	1 Year
Horn Antenna	SCHWARZBECK	BBHA9120D	9120D-1246	Aug. 14,2025	1 Year
High NOISE	ZHINAN	ZN3380C	15002	Aug. 14,2025	1 Year

AMPLIFIER					
Test S/W	Tonscend	JS32-RE/4.0.0.0			

3.4.6. For harmonic current emissions and voltage fluctuations/flicker test

Name of Equipment	Manufacturer	Model	Serial No.	Last Cal.	Calibration Interval
Harmonics / Flicker Test System	California Instruments	CTS/PACS-1-115	1534A00401	Aug. 14,2025	1 Year
AC Power Source	California Instruments	3001IX-208-CTS	1534A00401	Aug. 14,2025	1 Year
Test S/W	AMETEK	CTS 4			

3.4.7. For electrostatic discharge immunity test

Name of Equipment	Manufacturer	Model	Serial No.	Last Cal.	Calibration Interval
ESD Generator	SCHLODER	SESD216	606137	Aug. 14,2025	1 Year

3.4.8. For radio frequency electromagnetic field immunity (R/S) test

Name of Equipment	Manufacturer	Model	Serial No.	Last Cal.	Calibration Interval
Power meter	Agilent	E4419B	GB42421440	Aug. 14,2025	1 Year
Isotropic Field Probe	Narda	EP-601	611WX80275	Aug. 14,2025	1 Year
Amplifier	SKET	HAP_801000M-250W	201811050	Aug. 14,2025	1 Year
Amplifier	SKET	HAP_0103G-75W	201811051	Aug. 14,2025	1 Year
Amplifier	SKET	HAP_0306G-20W	201811052	Aug. 14,2025	1 Year
Log-periodic Antenna	SKET	ZDSZ-80T1000M-231	SKT231015	Aug. 14,2025	1 Year
Log-periodic Antenna	SKET	ZDSZ-1T6G-232	SKT232079	Aug. 14,2025	1 Year

3.4.9. For electrical fast transient/burst immunity test

Name of Equipment	Manufacturer	Model	Serial No.	Last Cal.	Calibration Interval
EFT Tester	HTEC	HCOMPACT52	190901	Aug. 14,2025	1 Year
EFT Coupling Clamp	HTEC	HEFT 51-C	1416011	Aug. 14,2025	1 Year

3.4.10. For surge immunity test

Name of Equipment	Manufacturer	Model	Serial No.	Last Cal.	Calibration Interval
Surge Tester	HTEC	HCWG 71	174302	Aug. 14,2025	1 Year
Surge Tester	HTEC	TCOMB 4	142103	Aug. 14,2025	1 Year
Surge Tester	HTEC	HTSG 70	175002	Aug. 14,2025	1 Year

3.4.11. For injected currents susceptibility test

Name of Equipment	Manufacturer	Model	Serial No.	Last Cal.	Calibration Interval
C/S Test System	SCHLODER	CDG-6000-25	126A1279/2014	Aug. 14,2025	1 Year
Coupling Decoupling Network	SCHLODER	CDN-M2+3	A2210251/2013	Aug. 14,2025	1 Year
Coupling/decoupling network	SCHLODER	CMCL-20	180901961-0201	Aug. 14,2025	1 Year
Test S/W	SCHLODER	CDG/1.0.0.0			

3.4.12. For voltage dips and short interruptions immunity test

Name of Equipment	Manufacturer	Model	Serial No.	Last Cal.	Calibration Interval
Dips Tester	HTEC	HV1P16T	170901	Aug. 14,2025	1 Year

4. EUT DESCRIPTION

Product	Window Cleaning Robot
Model	DDC55PRO
Power Supply	Adapter:GM95-240375-D Input:100-240V~, 50/60Hz, 2.5A Output:DC24V/3A 72W
Adapter	N/A
Power	N/A

I/O PORT

I/O PORT TYPES	Q'TY	TESTED WITH
AC Port	1	☒
DC Port	1	☒

Models Difference

N/A.

5. TEST METHODOLOGY

5.1. TEST MODE

The EUT was tested together with the thereinafter additional components, and a configuration, which produced the worst emission levels, was selected and recorded in this report.

The following test mode(s) were assessed.

Test Items		Test Mode
Emission	Conducted Emission	Working
	Disturbance Power	N/A
	Radiated Emission	Working
	Harmonic current emissions	Working
	Voltage fluctuations & flicker	Working
Immunity	ESD	Working
	RS	Working
	EFT	Working
	Surge	Working
	C/S	Working
	Dips	Working

5.2. EUT SYSTEM OPERATION

1. Set up EUT with the support equipment.
2. Make sure the EUT work normally during the test.

6. SETUP OF EQUIPMENT UNDER TEST

6.1. DESCRIPTION OF SUPPORT UNITS

The EUT has been tested as an independent unit together with other necessary accessories or support units. The following support units or accessories were used to form a representative test configuration during the tests.

No.	Equipment	Model	Serial No.	FCC ID	Trade Name	Data Cable	Power Cord
1.	N/A	N/A	N/A	N/A	N/A	N/A	N/A

Note: 1) All the equipment/cables were placed in the worst-case configuration to maximize the emission during the test.
2) Grounding was established in accordance with the manufacturer's requirements and conditions for the intended use.

6.2. CONFIGURATION OF SYSTEM UNDER TEST

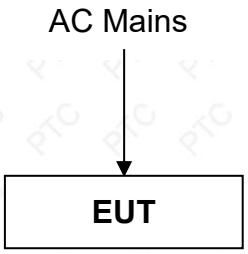

(EUT: Window Cleaning Robot)

7. EMISSION TEST

7.1. CONDUCTED EMISSION MEASUREMENT

7.1.1. LIMITS

Household appliances and equipment causing similar disturbances and regulation controls incorporation semiconductor devices

FREQUENCY	At mains terminals		At load terminals and additional terminals	
(MHz)	Quasi-peak dBμV	Average dBμV	Quasi-peak dBμV	Average dBμV
0.15 - 0.5	66-56	59-46	80	70
0.5 - 5.0	56	46	74	64
5.0 - 30.0	60	50	74	64

Mains terminals of tools

FREQUENCY	Rated motor power not exceeding 700W		Rated motor power above 700W and not exceeding 1000W		Rated motor power above 1000W	
(MHz)	Quasi-peak dBμV	Average dBμV	Quasi-peak dBμV	Average dBμV	Quasi-peak dBμV	Average dBμV
0.15 - 0.35	66-59	59-49	70-63	63-53	79-69	69-59
0.35 - 5.0	59	49	63	53	69	59
5.0 - 30.0	64	54	68	58	74	64

Note: 1) The lower limit shall apply at the transition frequencies.
2) Decreasing linearly with the logarithm of the frequency.

7.1.2. TEST PROCEDURES

The EUT and Support equipment, if needed, was set up as per the test configuration to simulate typical usage per the user's manual. When the EUT is a tabletop system, a wooden table with a height of 0.8 meters is used and is placed on the ground plane. When the EUT is floor standing equipment, it is placed on the ground plane, which has a 3-12 mm non-conductive covering to insulate the EUT from the ground plane. The EUT should be 0.8m apart from the AMN, where the mains cable supplied by the manufacturer is longer than 0.8 m,the excess should be folded at the centre into a bundle no longer than 0.4 m, Details please refer to test setup photography.
The Receiver scanned from 150 kHz to 30 MHz for emissions in each of the test modes. During the above scans, the emissions were maximized by cable manipulation.
A scan was taken on both power lines, Line and Neutral, recording at least the six highest

emissions. Emission frequency and amplitude were recorded into a computer in which correction factors were used to calculate the emission level and compare reading to the applicable limit. The test data of the worst-case condition(s) was recorded.
Note: Test Software Name:Tonscend,JS32-RE/4.0.0.3.

7.1.3. TEST SETUP

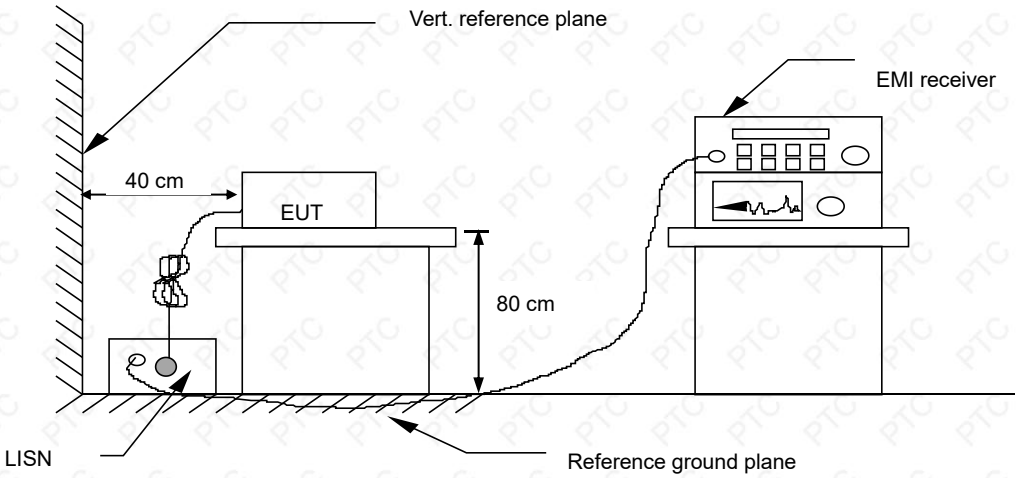

For the actual test configuration, please refer to the related item – Photographs of the Test Configuration.

7.1.4. TEST RESULT

Product name	Window Cleaning Robot	Tested By	Huo
Model	DDC55PRO	Detector Function	Quasi-peak/AV
Test Mode	Working	6 dB Bandwidth	9 kHz
Environmental Conditions	25℃, 60 % RH, 101.5 kPa	Test Result	Pass

Note:
L = Line Line, N = Neutral Line
Freq. = Emission frequency in MHz
Reading level (dBμV) = Receiver reading
Corr. Factor (dB) = attenuator + Cable loss
Level (dBμV) = Reading level (dBμV) + Corr. Factor (dB)
Limit (dBμV) = Limit stated in standard
Over Limit (dB) = Level (dBμV) – Limit (dBμV)
QP = Quasi-PeakAV = Average

Please refer to the following diagram:

Line:

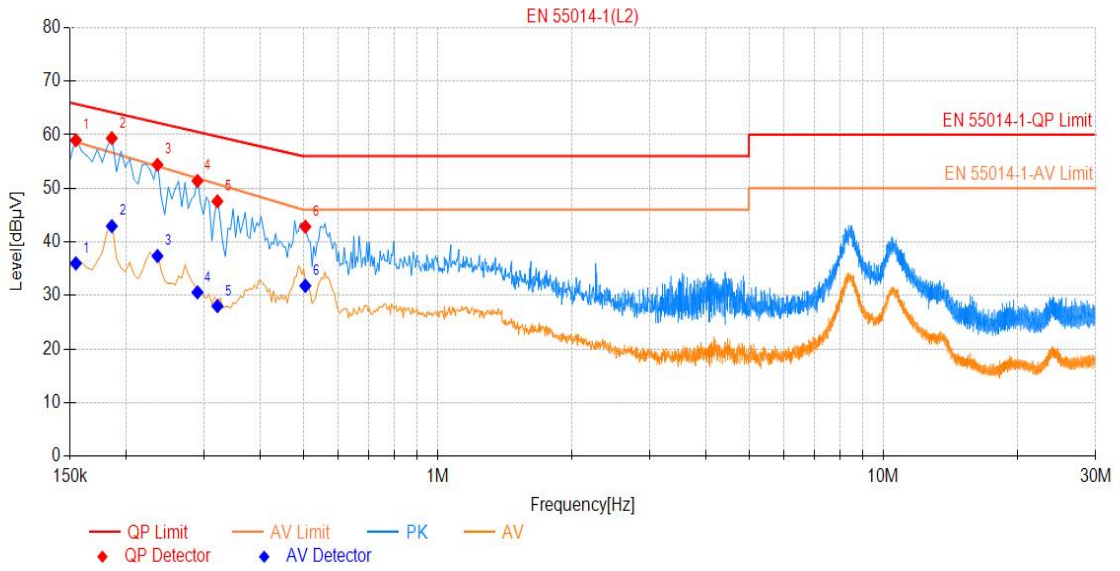

Final Data List

NO.	Freq. [MHz]	QP Reading [dBµV]	Factor [dB]	QP Value [dBµV]	QP Limit [dBµV]	QP Margin [dB]	AV Reading [dBµV]	AV Value [dBµV]	AV Limit [dBµV]	AV Margin [dB]	Verdict
1	0.155	49.10	9.88	58.98	65.75	6.77	26.11	35.99	58.68	22.69	PASS
2	0.186	49.47	9.89	59.36	64.21	4.85	33.05	42.94	56.68	13.74	PASS
3	0.236	44.49	9.91	54.40	62.25	7.85	27.45	37.36	54.13	16.77	PASS
4	0.290	41.45	9.94	51.39	60.54	9.15	20.64	30.58	51.90	21.32	PASS
5	0.321	37.63	9.95	47.58	59.68	12.10	18.06	28.01	50.79	22.78	PASS
6	0.506	32.89	9.95	42.84	56.00	13.16	21.84	31.79	46.00	14.21	PASS

Neutral:

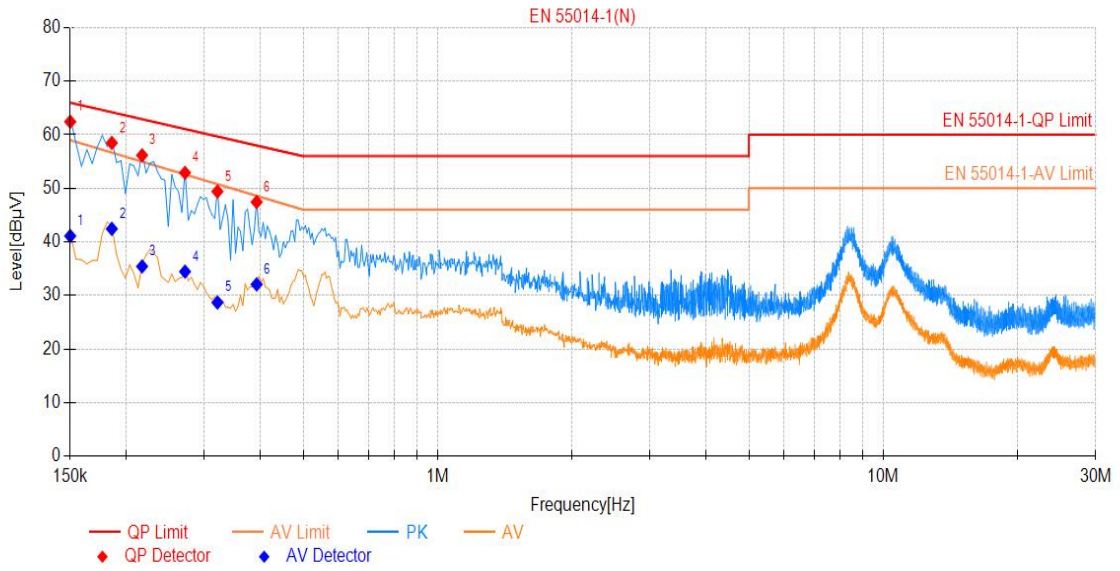

Final Data List											
NO.	Freq. [MHz]	QP Reading [dBµV]	Factor [dB]	QP Value [dBµV]	QP Limit [dBµV]	QP Margin [dB]	AV Reading [dBµV]	AV Value [dBµV]	AV Limit [dBµV]	AV Margin [dB]	Verdict
1	0.150	52.59	9.86	62.45	66.00	3.55	31.24	41.10	59.00	17.90	PASS
2	0.186	48.62	9.86	58.48	64.21	5.73	32.58	42.44	56.68	14.24	PASS
3	0.218	46.30	9.87	56.17	62.91	6.74	25.55	35.42	54.99	19.57	PASS
4	0.272	43.01	9.90	52.91	61.07	8.16	24.55	34.45	52.59	18.14	PASS
5	0.321	39.48	9.93	49.41	59.68	10.27	18.75	28.68	50.79	22.11	PASS
6	0.393	37.49	9.95	47.44	58.00	10.56	22.11	32.06	48.60	16.54	PASS

7.2. CLICK MEASUREMENT

7.2.1. LIMITS

The click limit Lq is determined from the formula:

Lq = L + ΔL

which the limits L for continuous disturbance shall be increased (see table 1):

which corresponding to the click rate N shall be calculated the amount ΔL by

ΔL = 44 dB for N < 0,2

ΔL = [20 log(30/N)] dB for 0,2 ≤ N < 30

Table 1

FREQUENCY (MHz)	At mains terminals		At load terminals and additional terminals	
	Quasi-peak dBμV	Average dBμV	Quasi-peak dBμV	Average dBμV
0.15 - 0.5	66-56	59-46	80	70
0.5 - 5.0	56	46	74	64
5.0 - 30.0	60	50	74	64

7.2.2. TEST PROCEDURE

The EUT and Support equipment, if needed, was set up as per the test configuration to simulate typical usage per the user's manual. When the EUT is a tabletop system, a wooden table with a height of 0.8 meters is used and is placed on the ground plane. When the EUT is floor standing equipment, it is placed on the ground plane, which has a 3-12 mm non-conductive covering to insulate the EUT from the ground plane. The EUT should be 0.8 m apart from the AMN, where the mains cable supplied by the manufacturer is longer than 1m, the excess should be folded at the centre into a bundle no longer than 0.4 m, Details please refer to test setup photography.

At first, determining N by measuring the Clicks, calculating the limit.
Then, use the Upper quartile method to confirm EUT is fulfilled the requirement of standard or not.

The amplitude of the clicks shall be evaluated only at the following restricted number of frequencies: 150 kHz; 500 kHz; 1.4 MHz and 30 MHz

7.2.3. TEST SETUP

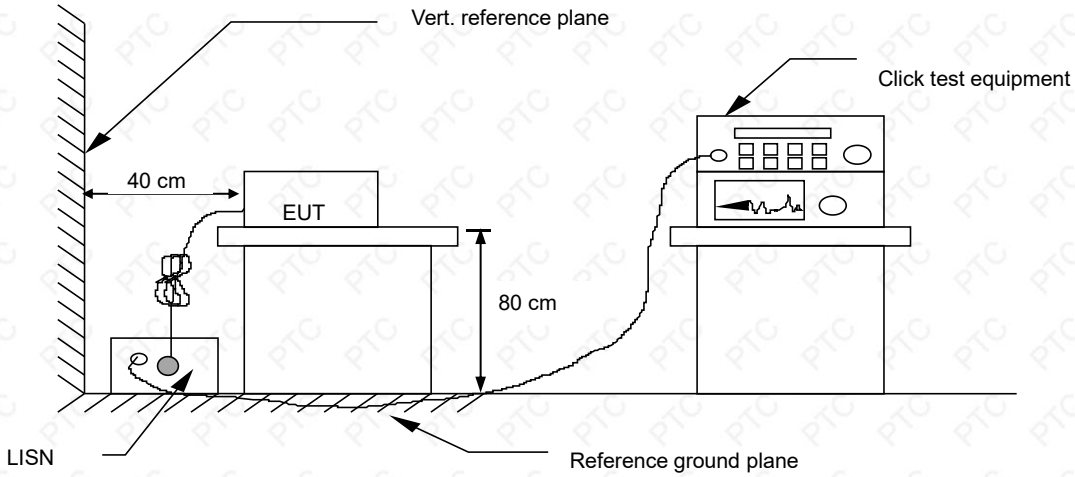

For the actual test configuration, please refer to the related item – Photographs of the Test Configuration

7.2.4. TEST RESULT

This test is not applicable because the EUT does not have the relative function.

7.3. DISTURBANCE POWER MEASUREMENT

7.3.1. LIMITS

FREQUENCY (MHz)	Household appliances and similar appliances		Rated motor power not exceeding 700W		Rated motor power above 700W and not exceeding 1000W		Rated motor power above 1000W	
	QP dBpW	Average dBpW	QP dBpW	Average dBpW	QP dBpW	Average dBpW	QP dBpW	Average dBpW
30 ~ 300	45-55	35-45	45-55	35-45	49-59	39-49	55-65	45-55
FREQUENCY (MHz)	**Household appliances and similar appliances**		**Rated motor power not exceeding 700W**		**Rated motor power above 700W and not exceeding 1000W**		**Rated motor power above 1000W**	
	QP dBpW	**Average dBpW**	**QP dBpW**	**Average dBpW**	**QP dBpW**	**Average dBpW**	**QP dBpW**	**Average dBpW**
200 ~ 300	0 to 10 dB		0 to 10 dB		0 to 10 dB		0 to 10 dB	

Note: 1) The lower limit shall apply at the transition frequencies.
2) Increasing linearly with the frequency.
3) QP means Quasi-peak, AV means Average.
4) The limit of column 2 and 3 apply to this product.

7.3.2. TEST PROCEDURE

The EUT is place on a 0.8 meters height wooden table above the ground plane, and kept at least 0.8 m from other metallic object. The straight portion of lead would put on 6 m long testing bench of (if lead is shorter than 6 m it should be extended)

Any lead connecting the main appliance to an auxiliary apparatus is disconnected if this does not affect the operation of the appliance, or is isolated by means of ferrite rings (or an absorbing clamp) close to the appliance.

The receiver scanned from 30 MHz to 300 MHz. Emissions were scanned and measured to moving the absorbing clamp along the main lead until the maximum emission value is found. Recorded at least the six highest emissions.

The test data of the worst-case condition(s) was recorded.

Note: Test Software Name: Tonscend,JS32-RE/4.0.0.3.

7.3.3. TEST SETUP

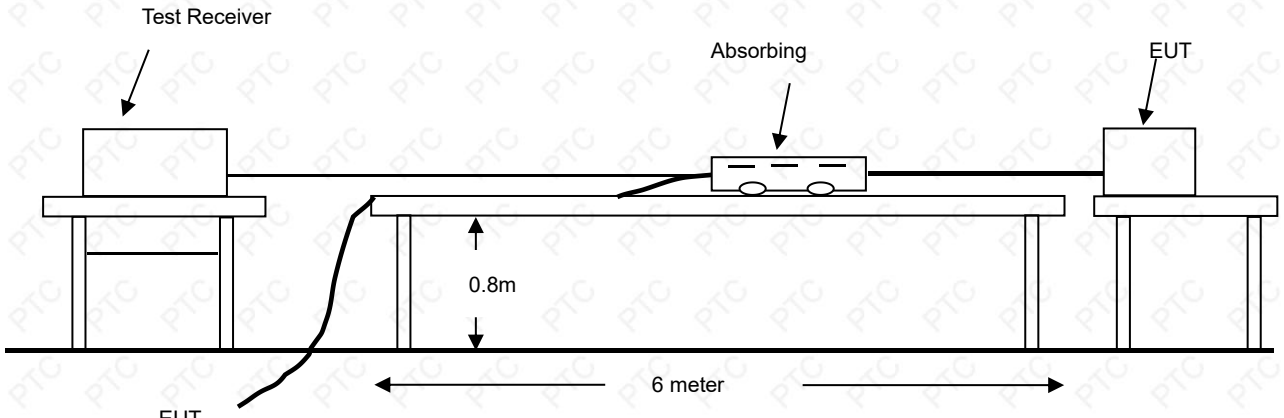

For the actual test configuration, please refer to the related item – Photographs of the Test Configuration

7.3.4. TEST RESULT

N/A

7.4. RADIATED EMISSION MEASUREMENT

7.4.1. LIMITS

FREQUENCY (MHz)	Limit (dBμV/m) (At 3m)
30 ~ 230	40
230 ~ 1000	47
1000~ 3000	50(Average), 70(Peak)
3000~ 6000	54(Average), 74(Peak)

Note: 1) The lower limit shall apply at the transition frequencies.

2) Emission level (dBμV/m) = 20 log Emission level (μV/m).

7.4.2. TEST PROCEDURE

The equipment was set up as per the test configuration to simulate typical usage per the user's manual. When the EUT is a tabletop system, a wooden turntable with a height of 0.8 meters is used which is placed on the ground plane. When the EUT is floor standing equipment, it is placed on the ground plane which has a 0.1 m non-conductive covering to insulate the EUT from the ground plane.

The antenna was placed at 3 meter away from the EUT. The antenna connected to the spectrum analyzer via a cable and at times a pre-amplifier would be used.

The analyzer / receiver quickly scanned from 30 MHz to 6000 MHz. The EUT test program was started. Emissions were scanned and measured rotating the EUT to 360 degrees and positioning the antenna 1 to 4 meters above the ground plane, in both the vertical and the horizontal polarization, to maximize the emission reading level.

During the above scans, the emissions were maximized by cable manipulation. Each modes is measured, recorded at least the six highest emissions. The emission frequency, amplitude, antenna position, polarization and turntable position were recorded into a computer in which correction factors were used to calculate the emission level and compare reading to the applicable limit and only Q.P. reading is presented.

The test data of the worst-case condition(s) was recorded.
Note: Test Software Name: Tonscend,JS32-RE/4.0.0.0.

7.4.3. TEST SETUP

Frequency Range: Below 1 GHz

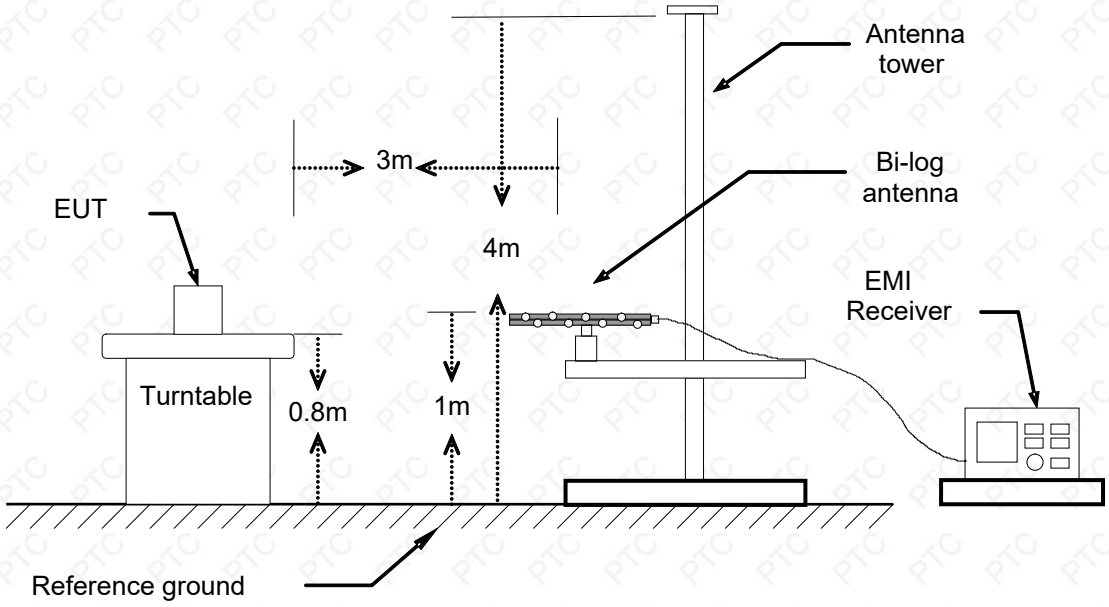

For the actual test configuration, please refer to the related item – Photographs of the Test Configuration

Frequency Range: Above 1 GHz

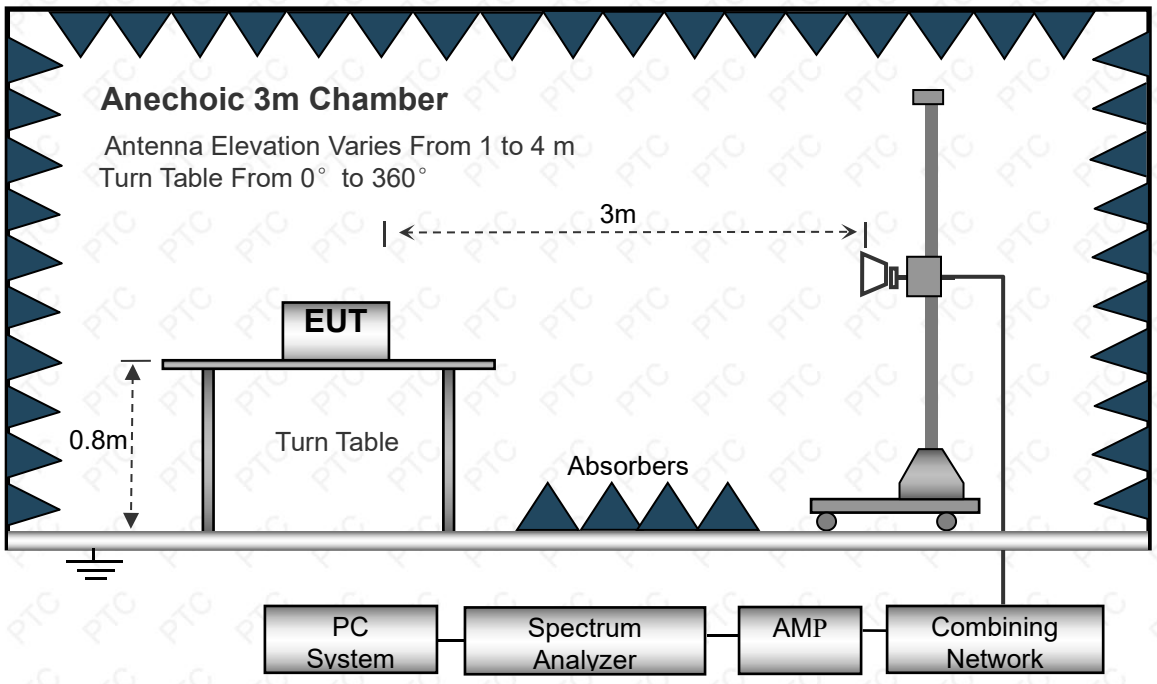

7.4.4. TEST RESULT

Product name	Window Cleaning Robot	Antenna Distance	3 m
Model	DDC55PRO	Antenna Pole	Vertical / Horizontal
Test Mode	Working	Detector Function	Quasi-peak
Environmental Conditions	25℃, 60 % RH, 101.5 kPa	6 dB Bandwidth	120 kHz
Tested by	Li	Test Result	Pass

Note:
Freq. = Emission frequency in MHz
Reading level (dBμV) = Receiver reading(dBμV)
Corr.Factor (dB/m)=Antenna factor(dB/m)+Cable loss(dB)-Preamp Factor(dB)
Measurement (dBμV/m)=Reading level(dBμV)+ Corr. Factor (dB/m)
Limit (dBμV/m) = Limit stated in standard
Over Limit (dB) = Measurement (dBμV/m) – Limit (dBμV/m)
QP = Quasi-Peak

The highest frequency of the EUT internal source is greater than 108MHz, so the frequency is measured to 6GHz.

Please refer to the following diagram:（Radiated Emission test Result below 1G ）

Vertical:

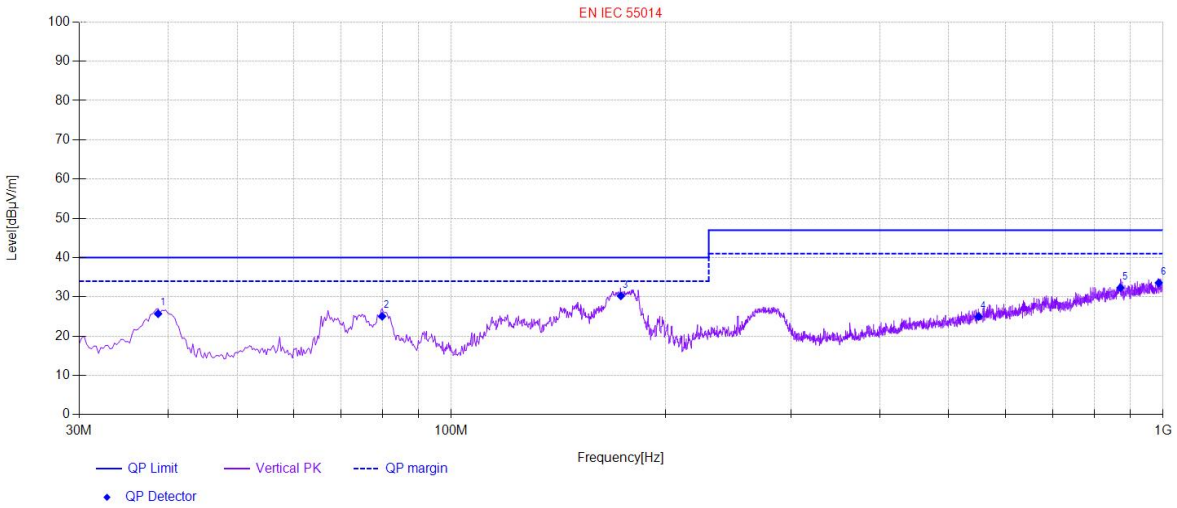

Final Data List[QP]								
NO.	Freq. [MHz]	QP Reading [dBµV/m]	Factor [dB]	QP Value [dBµV/m]	QP Limit [dBµV/m]	QP Margin [dB]	Polarity	Verdict
1	38.73	36.37	-10.68	25.69	40.00	14.31	Vertical	PASS
2	79.96	39.28	-14.23	25.05	40.00	14.95	Vertical	PASS
3	173.08	39	-8.75	30.25	40.00	9.75	Vertical	PASS
4	550.65	25.97	-0.98	24.99	47.00	22.01	Vertical	PASS
5	871.23	27.13	5.17	32.30	47.00	14.70	Vertical	PASS
6	986.42	26.79	6.77	33.56	47.00	13.44	Vertical	PASS

Horizontal:

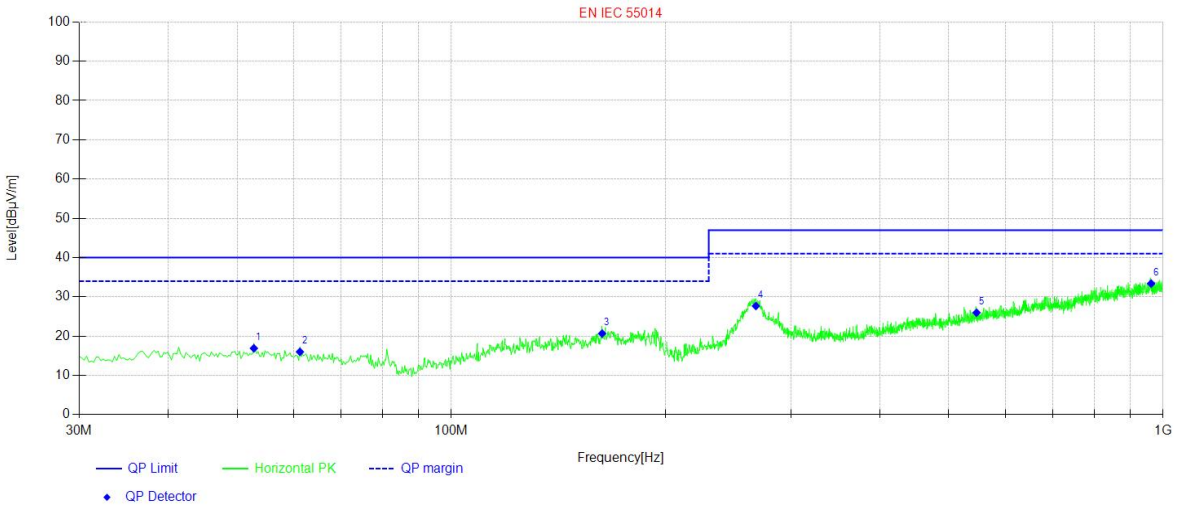

Final Data List[QP]								
NO.	Freq. [MHz]	QP Reading [dBµV/m]	Factor [dB]	QP Value [dBµV/m]	QP Limit [dBµV/m]	QP Margin [dB]	Polarity	Verdict
1	52.80	26.99	-10.09	16.90	40.00	23.10	Horizontal	PASS
2	61.28	26.88	-10.88	16.00	40.00	24.00	Horizontal	PASS
3	162.89	28.87	-8.21	20.66	40.00	19.34	Horizontal	PASS
4	267.89	35.89	-8.21	27.68	47.00	19.32	Horizontal	PASS
5	547.01	26.95	-0.98	25.97	47.00	21.03	Horizontal	PASS
6	962.17	26.75	6.64	33.39	47.00	13.61	Horizontal	PASS

Please refer to the following diagram:（Radiated Emission test Result Above 1G ）

Vertical:

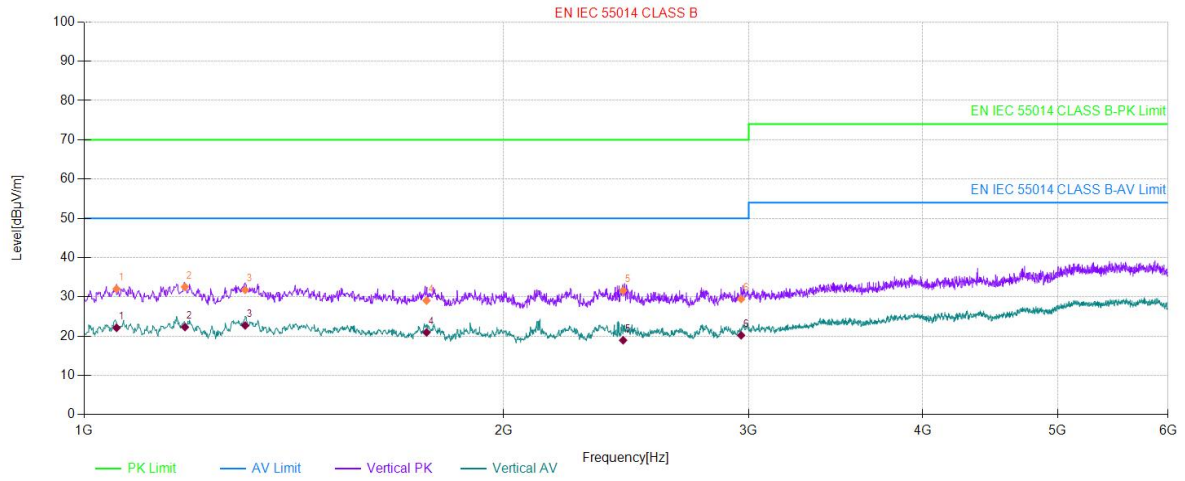

PK Final Data List										
NO.	Freq. [MHz]	Factor [dB]	PK Value [dBµV/m]	PK Limit [dBµV/m]	PK Margin [dB]	Detector	Height [cm]	Angle [°]	Polarity	Verdict
1	1055.00	-2.87	32.02	70.00	37.98	Peak	100	172	Vertical	PASS
2	1181.25	-2.93	32.55	70.00	37.45	Peak	100	204	Vertical	PASS
3	1305.00	-2.83	31.77	70.00	38.23	Peak	100	178	Vertical	PASS
4	1761.25	-3.49	29.05	70.00	40.95	Peak	100	204	Vertical	PASS
5	2437.50	-0.87	31.61	70.00	38.39	Peak	100	93	Vertical	PASS
6	2962.50	0.92	29.45	70.00	40.55	Peak	100	275	Vertical	PASS

AV Final Data List										
NO.	Freq. [MHz]	Factor [dB]	AV Value [dBµV/m]	AV Limit [dBµV/m]	AV Margin [dB]	Detector	Height [cm]	Angle [°]	Polarity	Verdict
1	1055.00	-2.87	22.12	50.00	27.88	AV	100	172	Vertical	PASS
2	1181.25	-2.93	22.30	50.00	27.70	AV	100	204	Vertical	PASS
3	1305.00	-2.83	22.72	50.00	27.28	AV	100	178	Vertical	PASS
4	1761.25	-3.49	20.95	50.00	29.05	AV	100	204	Vertical	PASS
5	2437.50	-0.87	18.95	50.00	31.05	AV	100	93	Vertical	PASS
6	2962.50	0.92	20.20	50.00	29.80	AV	100	275	Vertical	PASS

Horizontal:

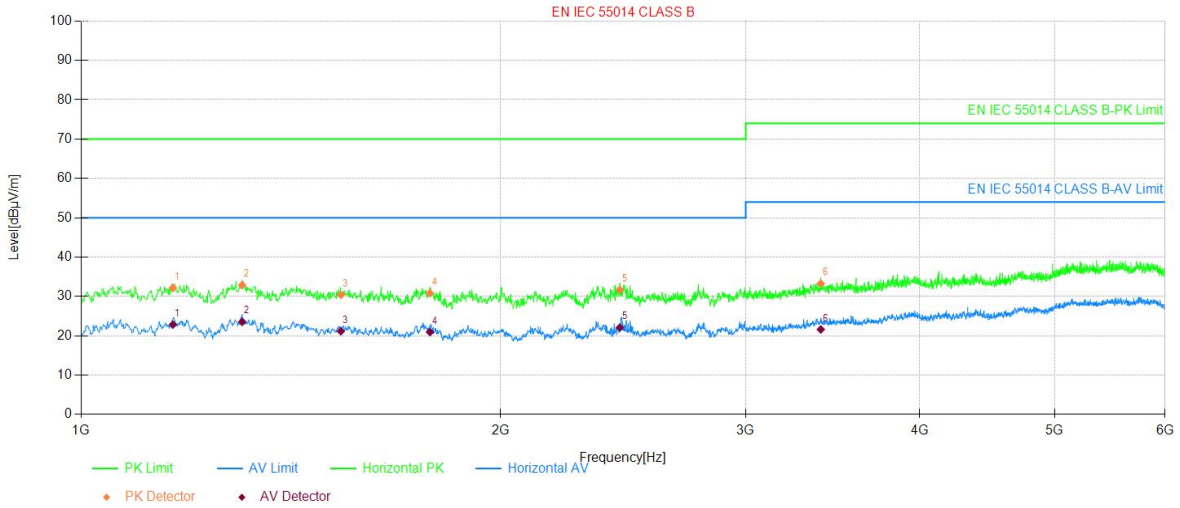

PK Final Data List										
NO.	Freq. [MHz]	Factor [dB]	PK Value [dBµV/m]	PK Limit [dBµV/m]	PK Margin [dB]	Detector	Height [cm]	Angle [°]	Polarity	Verdict
1	1163.75	-2.92	32.17	70.00	37.83	Peak	100	208	Horizontal	PASS
2	1305.00	-2.83	32.86	70.00	37.14	Peak	100	282	Horizontal	PASS
3	1536.25	-3.14	30.40	70.00	39.60	Peak	100	349	Horizontal	PASS
4	1780.00	-3.51	30.83	70.00	39.17	Peak	100	129	Horizontal	PASS
5	2436.25	-0.87	31.69	70.00	38.31	Peak	100	311	Horizontal	PASS
6	3396.25	1.75	33.29	74.00	40.71	Peak	100	3	Horizontal	PASS

AV Final Data List										
NO.	Freq. [MHz]	Factor [dB]	AV Value [dBµV/m]	AV Limit [dBµV/m]	AV Margin [dB]	Detector	Height [cm]	Angle [°]	Polarity	Verdict
1	1163.75	-2.92	22.85	50.00	27.15	AV	100	208	Horizontal	PASS
2	1305.00	-2.83	23.55	50.00	26.45	AV	100	282	Horizontal	PASS
3	1536.25	-3.14	21.17	50.00	28.83	AV	100	349	Horizontal	PASS
4	1780.00	-3.51	20.94	50.00	29.06	AV	100	129	Horizontal	PASS
5	2436.25	-0.87	22.07	50.00	27.93	AV	100	311	Horizontal	PASS
6	3396.25	1.75	21.62	54.00	32.38	AV	100	3	Horizontal	PASS

7.5. HARMONICS CURRENT MEASUREMENT

7.5.1. LIMITS OF HARMONICS CURRENT MEASUREMENT

Limit for Class A equipment	
Harmonics Order N	Max. permissible harmonics current A
Odd harmonics	
3	2.30
5	1.14
7	0.77
9	0.40
11	0.33
13	0.21
15≦n≦39	0.15x(15/n)
Even harmonics	
2	1.08
4	0.43
6	0.30
8≦n≦40	0.23x8/n

Limit for Class D equipment		
Harmonics Order n	Max. permissible harmonics current per watt mA/W	Max. permissible harmonics current A
Odd Harmonics only		
3	3.4	2.30
5	1.9	1.14
7	1.0	0.77
9	0.5	0.40
11	0.35	0.33
13	0.30	0.21
15≦n≦39 (odd harmonics only)	3.85/n	0.15x(15/n)

Limit for Class C equipment [a]	
Harmonics Order n	Max. permissible harmonics current expressed as a percentage of the input current at the fundamental frequency A
2	2
3	27[b]
5	10
7	7
9	5
11≦n<≦39 (odd harmonics only)	3
[a]:For some Class C products, other emission limits apply (see EN IEC 61000-3-2 7.4).	
[b]:The limit is determined based on the assumption of modern lighting technologies having power factors of 0,90 or higher	

Note: Class A, B, C and D are classified according to item 7.5.2.of this report

7.5.2. TEST PROCEDURES

The EUT was placed on the top of a wooden table 0.8 meters above the ground and operated to produce the maximum harmonic. The classification of EUT is according to section 5 of EN IEC 61000-3-2.

The EUT is classified as follows:

Class A:

Equipment not specified as belonging to Class B, C or D shall be considered as Class A equipment.

Some examples of Class A equipment are:

– balanced three-phase equipment;

– household appliances, excluding those specified as belonging to Class B, C or D;

– vacuum cleaners;

– high pressure cleaners;

– tools, excluding portable tools;

– independent phase control dimmers;

– audio equipment;

– professional luminaires for stage lighting and studios.

NOTE 1 Equipment that can be shown to have a significant effect on the supply system might be reclassified in a future edition of this document, taking into account the following factors:

– number of pieces of equipment in use;

– duration of use;

– simultaneity of use;

– power consumption;

– harmonic spectrum, including phase.

Class B:

- portable tools;
- arc welding equipment which is not professional equipment.

Class C:

- lighting equipment.

Class D:

Equipment having a specified power less than or equal to 600 W according to 6.3.2, of the following types:

- personal computers and personal computer monitors;

- television receivers;
- refrigerators and freezers having one or more variable-speed drives to control compressor motor(s).

NOTE 2 Class D limits are reserved for equipment that, by virtue of the factors listed in note 1 , can be shown to have a pronounced effect on the public electricity supply system.

The correspondent test program of test instrument to measure the current harmonics emanated from EUT is chosen. The measure time shall be not less than the time necessary for the EUT to be exercised.

7.5.3. TEST SETUP

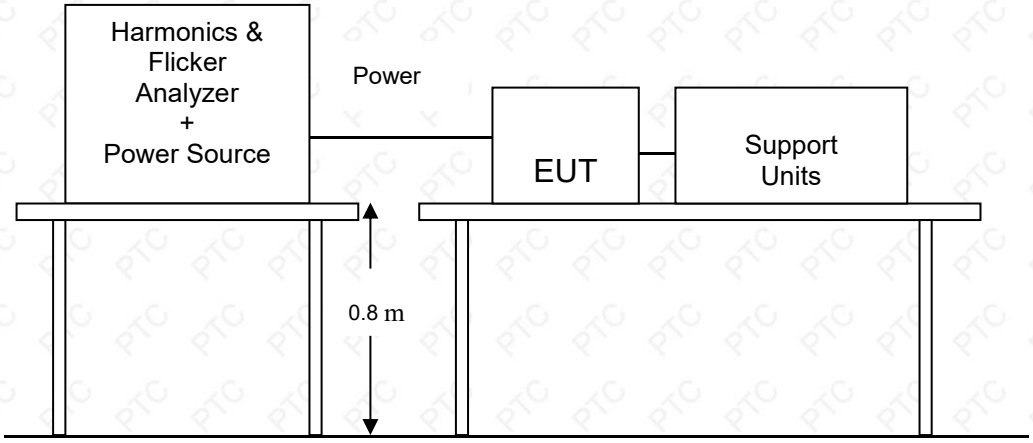

For the actual test configuration, please refer to the related item – Photographs of the Test Configuration.

7.5.4. TEST RESULT

N/A.

Remark:The power less than 75 walts.

VOLTAGE FLUCTUATION AND FLICKS MEASUREMENT

7.5.5. LIMITS OF VOLTAGE FLUCTUATION AND FLICKS MEASUREMENT

TEST ITEM	LIMIT	REMARK
P_{st}	1.0	P_{st} means short-term flicker indicator.
P_{lt}	0.65	P_{lt} means long-term flicker indicator.
T_{dt} (ms)	500	T_{dt} means maximum time that dt exceeds 3 %.
d_{max} (%)	4/6/7 %	d_{max} means maximum relative voltage change.
dc (%)	3.3 %	dc means relative steady-state voltage change

7.5.6. TEST PROCEDURE

The EUT was placed on the top of a wooden table 0.8 meters above the ground and operated to produce the most unfavorable sequence of voltage changes under lighting operating conditions.
During the flick measurement, the measure time shall include that part of whole operation cycle in which the EUT produce the most unfavorable sequence of voltage changes. The observation period for short-term flicker indicator is 10 minutes and the observation period for long-term flicker indicator is 2 hours.

7.5.7. TEST SETUP

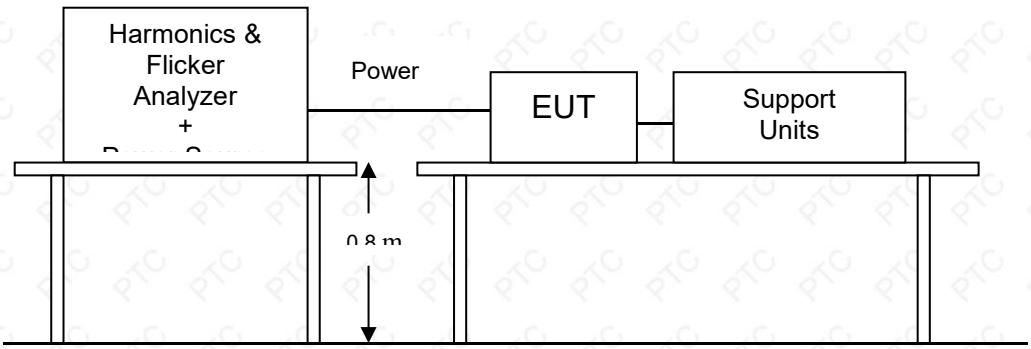

For the actual test configuration, please refer to the related item – Photographs of the Test Configuration.

7.5.8. TEST RESULT

Product	Window Cleaning Robot	Tested by	Bruce
Model	DDC55PRO	Observation Period (Tp)	10 mins
Test Mode	Working	Test Result	Pass
Environmental Conditions	24.3℃, 54.5 % RH, 101.1 kPa		

Please refer to the following test data:

Test Result: Pass **Status: Test Completed**

Pst_i and limit line **European Limits**

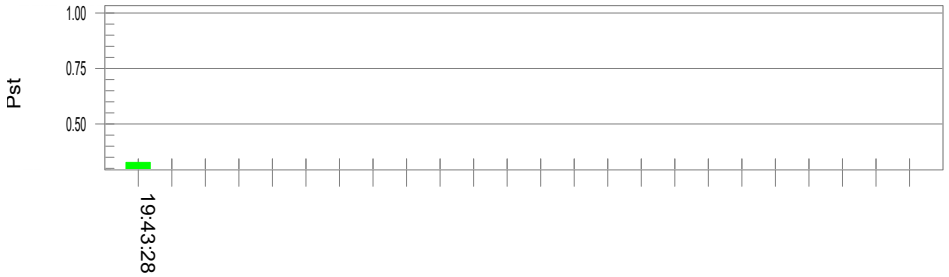

Plt and limit line

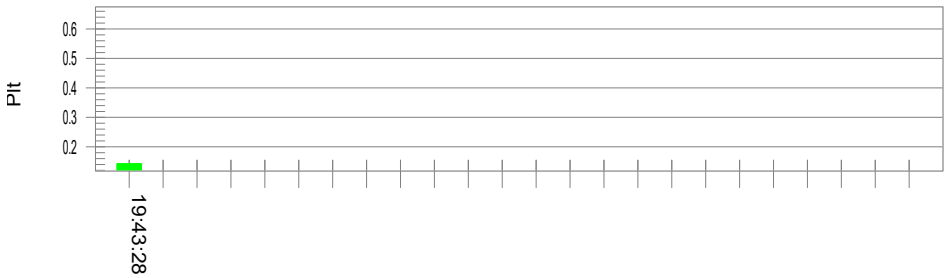

Parameter values recorded during the test:

Vrms at the end of test (Volt):	**229.27**			
T-max (mS):	**0**	**Test limit (mS):**	**500.0**	**Pass**
Highest dc (%):	**0.00**	**Test limit (%):**	**3.30**	**Pass**
Highest dmax (%):	**0.00**	**Test limit (%):**	**4.00**	**Pass**
Highest Pst (10 min. period):	**0.327**	**Test limit:**	**1.000**	**Pass**
Highest Plt (2 hr. period):	**0.143**	**Test limit:**	**0.650**	**Pass**

8. IMMUNITY TEST

8.1. GENERAL DESCRIPTION

Product Standard	EN IEC 55014-2	
	Test Type	Minimum Requirement
Basic Standard, Specification, and Performance Criterion required	IEC 61000-4-2	Electrostatic Discharge – ESD: ±8 kV air discharge, ±4 kV Contact discharge, Performance Criterion B
	IEC 61000-4-3	Radio-Frequency Electromagnetic Field Susceptibility Test – RS: 80 MHz to 1 GHz, 3 V/m, 80 % AM(1 kHz), Performance Criterion A
	IEC 61000-4-4	Electrical Fast Transient/Burst - EFT, Power line: ±1kV, Signal line: ±0.5kV, Performance Criterion B
	IEC 61000-4-5	Surge Immunity Test: 1.2/50 μs Open Circuit Voltage, 8 /20 μs Short Circuit Current, Power Port ~ Line to line: ±1 kV, Line to ground: ±2 kV Signal and Control Port : ±0.5 kV Performance Criterion B
	IEC 61000-4-6	Conducted Radio Frequency Disturbances Test –CS: 0.15 ~ 230 MHz, 3 Vrms, 80 % AM, 1 kHz, Performance Criterion A
	IEC 61000-4-11	Voltage Dips and Interruptions: 50/60Hz i) 0 % reduction for 0.5/0.5 period, Performance Criterion C ii) 40 % reduction for 10/12 period, Performance Criterion C iii) 70 % reduction for 25/30 period Performance Criterion C

8.2. GENERAL PERFORMANCE CRITERIA DESCRIPTION

Criteria A:	The apparatus shell continues to operate as intended without operator intervention. No degradation of performance or loss of function is allowed below a performance level specified by the manufacturer, when the apparatus is used as intended. The performance level may be replaced by a permissible loss of performance. If the manufacturer does not specify the minimum performance level or the permissible performance loss, then either of these may be derived from the product description and documentation, and by what the user may reasonably expect from the equipment if used as intended.
Criteria B:	After test, the apparatus shell continues to operate as intended without operator intervention. No degradation of performance or loss of function is allowed, after the application of the phenomenon below a performance level specified by the manufacturer, when the apparatus is used as intended. The performance level may be replaced by a permissible loss of performance. During the test, degradation of performance is however allowed. However, no change of operating state if stored data is allowed to persist after the test. If the manufacturer does not specify the minimum performance level or the permissible performance loss, then either of these may be derived from the product description and documentation, and by what the user may reasonably expect from the equipment if used as intended.
Criteria C:	Temporary loss of function is allowed, provided the functions is self-recoverable or can be restored by the operation of controls by the user in accordance with the manufacturer instructions. Functions, and/or information stored in non-volatile memory, or protected by a battery backup, shall not be lost.

8.3. ELECTROSTATIC DISCHARGE (ESD)

8.3.1. TEST SPECIFICATION

Basic Standard:	IEC 61000-4-2
Discharge Impedance:	330 Ω
Working Capacity:	150 pF
Discharge Voltage:	Air Discharge: ±8 kV (Direct) Contact Discharge: ±4 kV (Direct/Indirect)
Polarity:	Positive & Negative
Number of Discharge:	10 times at each test point
Discharge Mode:	1 time/s
Performance Criterion:	B

8.3.2. TEST PROCEDURE

The discharges shall be applied in two ways:

a) Contact discharges to the conductive surfaces and coupling planes:
Twenty dischargers (10 with positive and 10 with negative polarity) shall be applied on each accessible metallic part of the enclosure, terminals are excluded. In case of a non-conductive enclosure, dischargers shall be applied on the horizontal or vertical coupling planes. Test shall be performed at a maximum repetition rate of one discharge per second.

b) Air discharges at slots and apertures and insulating surfaces:
On those parts of the EUT where it is not possible to perform contact discharge testing, the equipment should be investigated to identify user accessible points where breakdown may occur. Such points are tested using the air discharge method. This investigation should be restricted to those area normally handled by the user. A minimum of 10 single air discharges shall be applied to the selected test point for each such area.

The basic test procedure was in accordance with IEC 61000-4-2:

a) The EUT was located 0.1 m minimum from all side of the HCP (dimensions 1.6 m x 0.8 m).

b) The support units were located another table 30 cm away from the EUT, but direct support unit was/were located at same location as EUT on the HCP and keep at a distance of 10cm with EUT.

c) The time interval between two successive single discharges was at least 1 second.

d) Contact discharges were applied to the non-insulating coating, with the pointed tip of the generator penetrating the coating and contacting the conducting substrate.

e) Air discharges were applied with the round discharge tip of the discharge electrode approaching the EUT as fast as possible (without causing mechanical damage) to touch the EUT. After each discharge, the ESD generator was removed from the EUT and re-triggered for a new single discharge. The test was repeated until all discharges were complete.

f) At least ten single discharges (in the most sensitive polarity) were applied at the front edge of each HCP opposite the center point of each unit of the EUT and 0.1 meters from the front of the EUT. The long axis of the discharge electrode was in the plane of the HCP and perpendicular to its front edge during the discharge.

g) At least ten single discharges (in the most sensitive polarity) were applied to the center of one vertical edge of the Vertical Coupling Plane (VCP) in sufficiently different positions that the four faces of the EUT were completely illuminated. The VCP (dimensions 0.5 m x 0.5 m) was placed vertically to and 0.1 meters from the EUT.

8.3.3. TEST SETUP

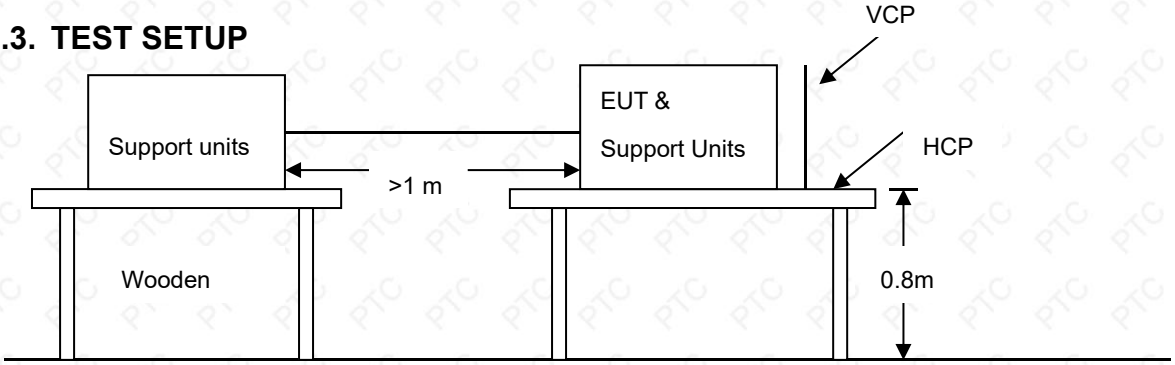

Ground Reference Plane

For the actual test configuration, please refer to the related item – Photographs of the Test Configuration.

Note:

1) TABLE-TOP EQUIPMENT

The configuration consisted of a wooden table 0.8 meters high standing on the ground reference plane (GRP) . The GRP consisted of a sheet of aluminum at least 0.25 mm thick, and 2.5 meters square connected to the protective grounding system. A horizontal coupling plane (HCP) (1.6 m x 0.8 m) was placed on the table and attached to the GRP by means of a cable with 940k total impedance. The

equipment under test, was installed in a representative system as described in section 7 of IEC

61000-4-2, and its cables were placed on the HCP and isolated by an insulating support of 0.5 mm thickness. A distance of 1-meter minimum was provided between the EUT and the walls of the laboratory and any other metallic structure.

2) FLOOR-STANDING EQUIPMENT

The equipment under test was installed in a representative system as described in section 7 of IEC 61000-4-2, and its cables were isolated from the ground reference plane by an insulating support of 0.1 meter thickness. The GRP consisted of a sheet of aluminum that is at least 0.25 mm thick, and 2.5 meters square connected to the protective grounding system and extended at least 0.5 meters from the EUT on all sides.

8.3.4. TEST RESULT

Product	Window Cleaning Robot	Environmental Conditions	24.3℃, 52 % RH, 101.2 kPa
Model	DDC55PRO	Tested By	Bruce
Test mode	Working	Test Result	Pass

Air Discharge					
Test Points	Test Levels	Results			
	± 8 kV	Pass	Fail	Observation	Performance Criterion
GAP	☒	☒	☐	Note ☒A☐B☐C	B
Hull	☒	☒	☐	Note ☒A☐B☐C	B
Button	☒	☒	☐	Note ☒A☐B☐C	B

Contact Discharge					
Test Points	Test Levels	Results			
	± 4 kV	Pass	Fail	Observation	Performance Criterion
HCP	☒	☒	☐	Note ☒A☐B☐C	B
VCP	☒	☒	☐	Note ☒A☐B☐C	B

Note: A) There was no change compared with initial operation during the test.

B) During the test, degradation of performance is allowed. However, no change of operating state or stored data is allowed to persist after the test. If the minimum performance level (or the permissible performance loss) is not specified by the manufacturer, then either of these may be derived from the product description and documentation, and by what the user may reasonably expect from the EUT if used as intended.

C) During and after testing, a temporary loss of function is allowed, provided the function is self-recoverable, or can be restored by the operation of the controls or cycling of the power to the EUT by the user in accordance with the manufacturer's instructions.

8.4. RADIATED RADIO-FREQUENCY, ELECTROMAGNETIC FIELD (RS)

8.4.1. TEST SPECIFICATION

Basic Standard:	IEC 61000-4-3
Frequency Range:	80 MHz ~ 1000 MHz
Field Strength:	3 V/m
Modulation:	1 kHz Sine Wave, 80 %, AM Modulation
Frequency Step:	1 % of preceding frequency value
Polarity of Antenna:	Horizontal and Vertical
Test Distance:	3 m
Antenna Height:	1.5 m
Performance Criterion:	A

8.4.2. TEST PROCEDURE

The test procedure was in accordance with IEC 61000-4-3

a) The testing was performed in a fully anechoic chamber. The transmit antenna was located at a distance of 3 meters from the EUT.

b) The frequency range is swept from 80 MHz to 1000 MHz, with the signal 80% amplitude modulated with a 1 kHz sine-wave. The rate of sweep did not exceed 1.5×10^{-3} decade/s, where the frequency range is swept incrementally, the step size was 1 % of preceding frequency value.

c) The dwell time at each frequency shall be not less than the time necessary for the EUT to be able to respond.

d) The test was performed with the EUT exposed to both vertically and horizontally polarized fields on each of the four sides.

8.4.3. TEST SETUP

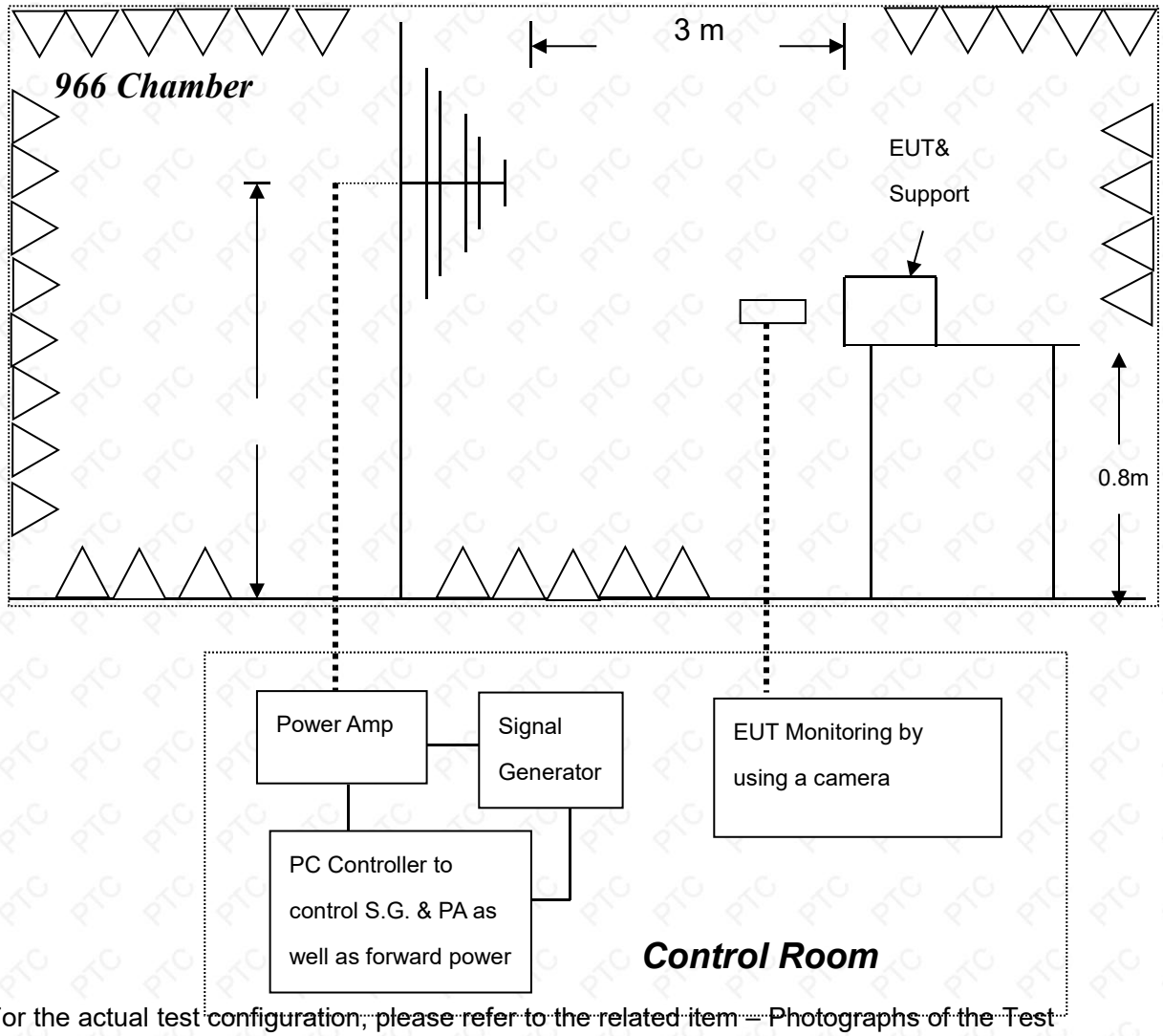

For the actual test configuration, please refer to the related item – Photographs of the Test Configuration.

Note:

TABLETOP EQUIPMENT

The EUT installed in a representative system as described in section 7 of IEC 61000-4-3 was placed on a non-conductive table 0.8 meters in height. The system under test was connected to the power and signal wire according to relevant installation instructions.

FLOOR STANDING EQUIPMENT

The EUT installed in a representative system as described in section 7 of IEC 61000-4-3 was placed on a non-conductive wood support 0.1 meters in height. The system under test was connected to the power and signal wire according to relevant installation instructions.

8.4.4. TEST RESULT

Product	Window Cleaning Robot	Environmental Conditions	24.1℃, 53 % RH, 101.1 kPa
Model	DDC55PRO	Tested By	Bruce
Test mode	Working	Test Result	Pass

Frequency (MHz)	Polarity	Position	Field Strength (V/m)	Observation	Performance Criterion
80 ~ 1000	V&H	Front	3	Note ☒A☐B☐C	A
80 ~ 1000	V&H	Rear	3	Note ☒A☐B☐C	A
80 ~ 1000	V&H	Left	3	Note ☒A☐B☐C	A
80 ~ 1000	V&H	Right	3	Note ☒A☐B☐C	A

Note: A) There was no change compared with initial operation during the test.

B) During the test, degradation of performance is allowed. However, no change of operating state or stored data is allowed to persist after the test. If the minimum performance level (or the permissible performance loss) is not specified by the manufacturer, then either of these may be derived from the product description and documentation, and by what the user may reasonably expect from the EUT if used as intended.

C) During and after testing, a temporary loss of function is allowed, provided the function is self-recoverable, or can be restored by the operation of the controls or cycling of the power to the EUT by the user in accordance with the manufacturer's instructions.

8.5. ELECTRICAL FAST TRANSIENT (EFT)

8.5.1. TEST SPECIFICATION

Basic Standard:	IEC 61000-4-4
Test Voltage:	Power Line: ±1 kV Signal/Control Line: ±0.5 kV
Polarity:	Positive & Negative
Impulse Frequency:	5 kHz
Impulse Wave-shape:	5/50 ns
Burst Duration:	15 ms
Burst Period:	300 ms
Test Duration:	2 mins
Performance Criterion:	B

8.5.2. TEST PROCEDURE

EUT is placed on a 0.1 m tall wooden table.

EUT operate at normal mode, the transient/burst was 5/50 ns in accordance with IEC 61000-4-4, both positive and negative polarity burst waveform were applied.

The duration time of each test line was 2 minutes.

8.5.3. TEST SETUP

The EUT installed in a representative system as described in section 7 of IEC 61000-4-4.

For the actual test configuration, please refer to the related item – photographs of the test configuration.

8.5.4. TEST RESULT

Product	Window Cleaning Robot	Environmental Conditions	24.3℃, 52 % RH, 101.2 kPa
Model	DDC55PRO	Tested By	Bruce
Test mode	Working	Test Result	Pass

Test Point	Polarity	Test Level (kV)	Observation	Performance Criterion
L	+/-	1	Note ☒A☐B☐C	B
N	+/-	1	Note ☒A☐B☐C	B
L – N	+/-	1	Note ☒A☐B☐C	B
RJ45 UTP cable	--	--	--	--

Note: A) There was no change compared with initial operation during the test.

B) During the test, degradation of performance is allowed. However, no change of operating state or stored data is allowed to persist after the test. If the minimum performance level (or the permissible performance loss) is not specified by the manufacturer, then either of these may be derived from the product description and documentation, and by what the user may reasonably expect from the EUT if used as intended.

C) During and after testing, a temporary loss of function is allowed, provided the function is self-recoverable, or can be restored by the operation of the controls or cycling of the power to the EUT by the user in accordance with the manufacturer's instructions.

8.6. SURGE IMMUNITY TEST

8.6.1. TEST SPECIFICATION

Basic Standard:	IEC 61000-4-5
Wave-Shape:	Combination Wave 1.2/50 μs Open Circuit Voltage 8/20 μs Short Circuit Current
Test Voltage:	Power Port ~ Line to line: ±1 kV, Line to ground: ± 2 kV
Surge Input/Output:	Power Line: L-N / L-PE / N-PE
Generator Source Impedance:	2 Ω between networks 12 Ω between network and ground
Polarity:	Positive/Negative
Phase Angle:	90°(positive polarity pulses) / 270°(negative polarity pulses)
Pulse Repetition Rate:	1 time / min
Number of Tests:	5 positive polarity pulses at the 90° phase angle, and 5 negative polarity pulses at 270° phase angle
Performance Criterion:	B

8.6.2. TEST PROCEDURE

EUT is placed on a 0.1 m (table type equipment) / 0.8 m (floor type equipment) tall wooden table.

EUT operate at normal mode, two types of combination wave generator (1.2/50 us open-circuit voltage and 8/20 us short-circuit current) are applied to the EUT power supply terminals via the capacitive coupling network.

The power cord between the EUT and the coupling/decoupling network shall not exceed 2 m in length.

8.6.3. TEST SETUP

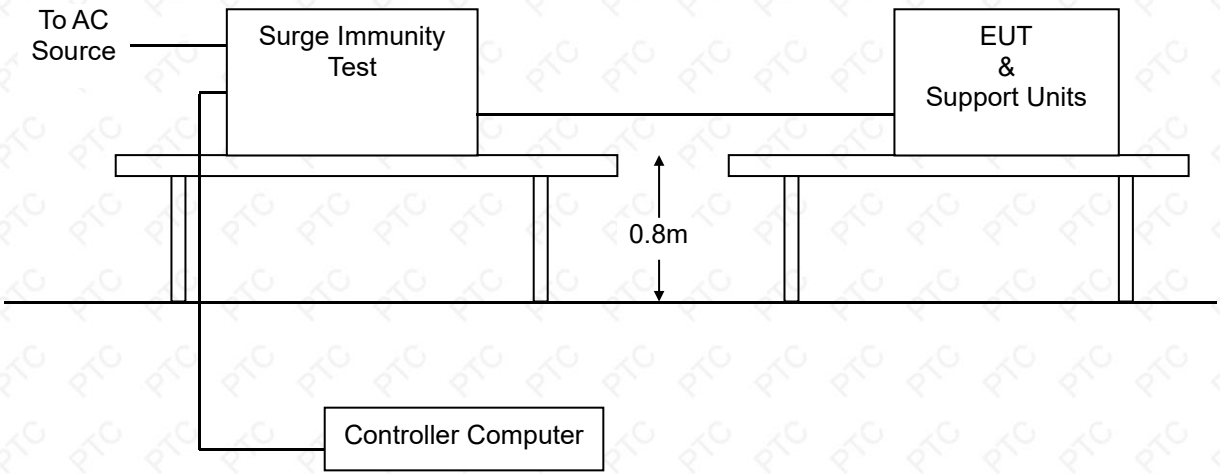

For the actual test configuration, please refer to the related item – Photographs of the Test Configuration.

8.6.4. TEST RESULT

Product	Window Cleaning Robot	Environmental Conditions	24.3℃, 52 % RH, 101.2 kPa
Model	DDC55PRO	Tested By	Bruce
Test mode	Working	Test Result	Pass

Test Point	Polarity	Test Level (kV)	Observation	Performance Criterion
L - N	+/-	1	Note ☒A☐B☐C	B

Note: A) There was no change compared with initial operation during the test.
B) During the test, degradation of performance is allowed. However, no change of operating state or stored data is allowed to persist after the test. If the minimum performance level (or the permissible performance loss) is not specified by the manufacturer, then either of these may be derived from the product description and documentation, and by what the user may reasonably expect from the EUT if used as intended.
C) During and after testing, a temporary loss of function is allowed, provided the function is self-recoverable, or can be restored by the operation of the controls or cycling of the power to the EUT by the user in accordance with the manufacturer's instructions.

8.7. CONDUCTED RADIO FREQUENCY DISTURBANCES (CS)

8.7.1. TEST SPECIFICATION

Basic Standard:	IEC 61000-4-6
Frequency Range:	0.15 MHz ~230 MHz
Field Strength:	3 V
Modulation:	1 kHz Sine Wave, 80 %, AM Modulation
Frequency Step:	1 % of preceding frequency value
Coupled cable:	Power Mains, Shielded
Coupling device:	CDN-M3/2 (3 wires/2 wires)
Performance Criterion:	A

8.7.2. TEST PROCEDURE

The EUT shall be tested within its intended operating and climatic conditions.
The test shall performed with the test generator connected to each of the coupling and decoupling devices in turn, while the other non-excited RF input ports of the coupling devices are terminated by a 50 Ω load resistor.
The frequency range was swept from 150 kHz to 230 MHz, using the signal level established during the setting process and with a disturbance signal of 80 % amplitude. The signal was modulated with a 1 kHz sine wave, pausing to adjust the RF signal level or the switch coupling devices as necessary. The sweep rate was 1.5 x 10^{-3} decades/s. Where the frequency range is swept incrementally, the step size was 1 % of preceding frequency value the dwell time of the amplitude modulated carrier at each frequency was 0.5 s.

8.7.3. TEST SETUP

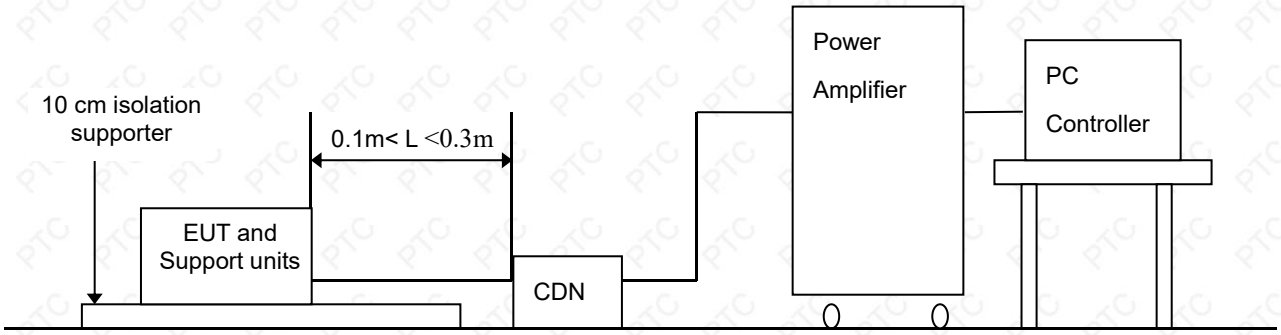

For the actual test configuration, please refer to the related item – Photographs of the Test Configuration

Note: 1) The EUT is setup 0.1 m above Ground Reference Plane

2) All relevant cables shall be provided with the appropriate coupling and decoupling devices at a distance between 0.1 meters and 0.3 meters from the projected geometry of the EUT on the ground reference plane.

8.7.4. TEST RESULT

Product	Window Cleaning Robot	Environmental Conditions	23.9℃, 50 % RH, 100.6 kPa
Model	DDC55PRO	Tested By	Bruce
Test mode	Working	Test Result	Pass

Frequency (MHz)	Field Strength (Vrms)	Injected Position	Injection Method	Observation	Performance Criterion
0.15 ~ 230	3	AC Mains	CDN-M2/M3	Note ☒A☐B☐C	A

Note: A) There was no change compared with initial operation during the test.

B) During the test, degradation of performance is allowed. However, no change of operating state or stored data is allowed to persist after the test. If the minimum performance level (or the permissible performance loss) is not specified by the manufacturer, then either of these may be derived from the product description and documentation, and by what the user may reasonably expect from the EUT if used as intended.

C) During and after testing, a temporary loss of function is allowed, provided the function is self-recoverable, or can be restored by the operation of the controls or cycling of the power to the EUT by the user in accordance with the manufacturer's instructions.

8.8. VOLTAGE DIP & VOLTAGE INTERRUPTIONS

8.8.1. TEST SPECIFICATION

Basic Standard:	IEC 61000-4-11
Test Duration Time:	3 test events in sequence
Interval Between Event:	10 seconds
Phase Angle:	0°
Test Cycle:	3 times
Performance Criterion:	C

8.8.2. TEST PROCEDURE

The EUT and support units were located on a wooden table, 0.8 m away from ground floor.

Setting the parameter of tests and then perform the test software of test simulator.

Changes to the voltage level shall occur at 0 degree crossing point in the a.c. voltage waveform.

Record the test result in test record form.

8.8.3. TEST SETUP

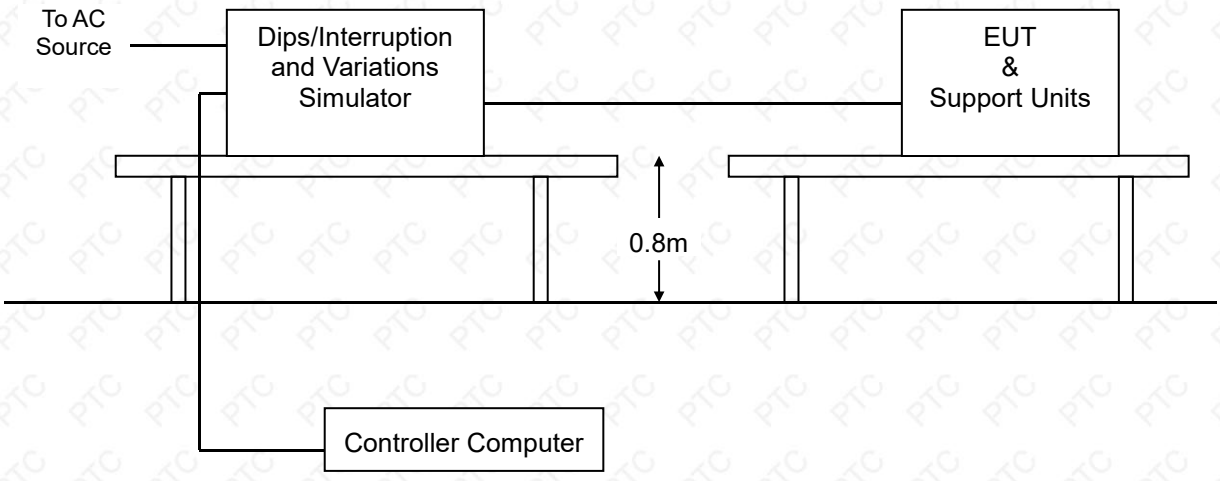

For the actual test configuration, please refer to the related item – Photographs of the Test Configuration.

8.8.4. TEST RESULT

Product	Window Cleaning Robot	Environmental Conditions	24.3℃, 54 % RH, 101.2 kPa
Model	DDC55PRO	Tested By	Bruce
Test mode	Working	Test Result	Pass

Test Power: 110/230 Vac, 50/60 Hz			
Voltage (% Reduction)	Duration (Period)	Observation	Performance Criterion
0	0.5/0.5	Note ☒A☐B☐C	C
40	10/12	Note ☒A☐B☐C	C
70	25/30	Note ☒A☐B☐C	C

Note: A) There was no change compared with initial operation during the test.

B) During the test, degradation of performance is allowed. However, no change of operating state or stored data is allowed to persist after the test. If the minimum performance level (or the permissible performance loss) is not specified by the manufacturer, then either of these may be derived from the product description and documentation, and by what the user may reasonably expect from the EUT if used as intended.

C) During and after testing, a temporary loss of function is allowed, provided the function is self-recoverable, or can be restored by the operation of the controls or cycling of the power to the EUT by the user in accordance with the manufacturer's instructions.

9. PHOTOGRAPHS OF THE TEST CONFIGURATION

CONDUCTED EMISSION TEST



RADIATED EMISSION TEST

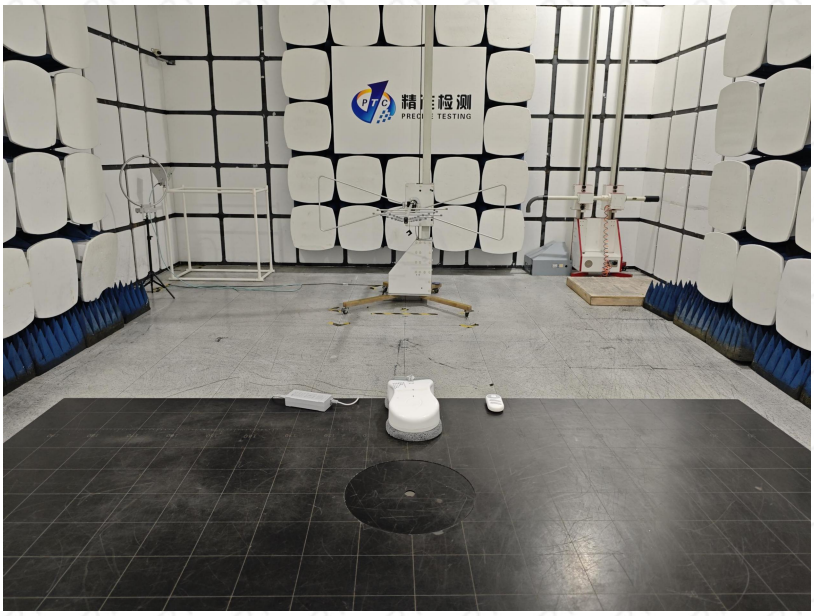

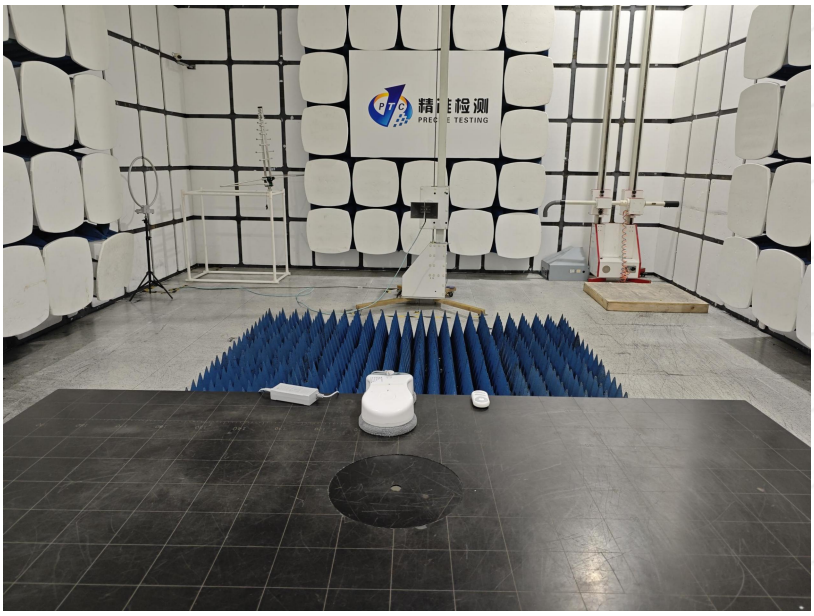

HARMONICS & FLICKER TEST

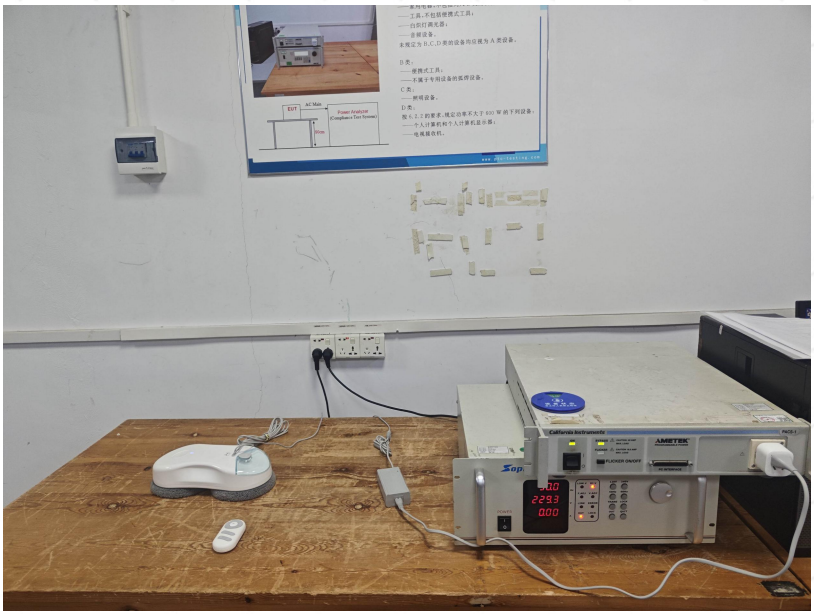

ESD TEST



EFT TEST



SURGE TEST

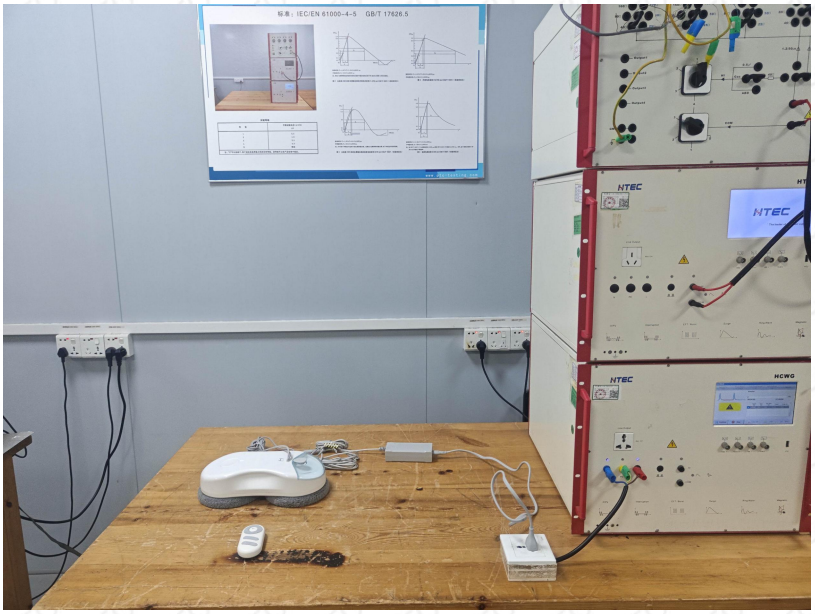

CS TEST



DIPS TEST



RS TEST

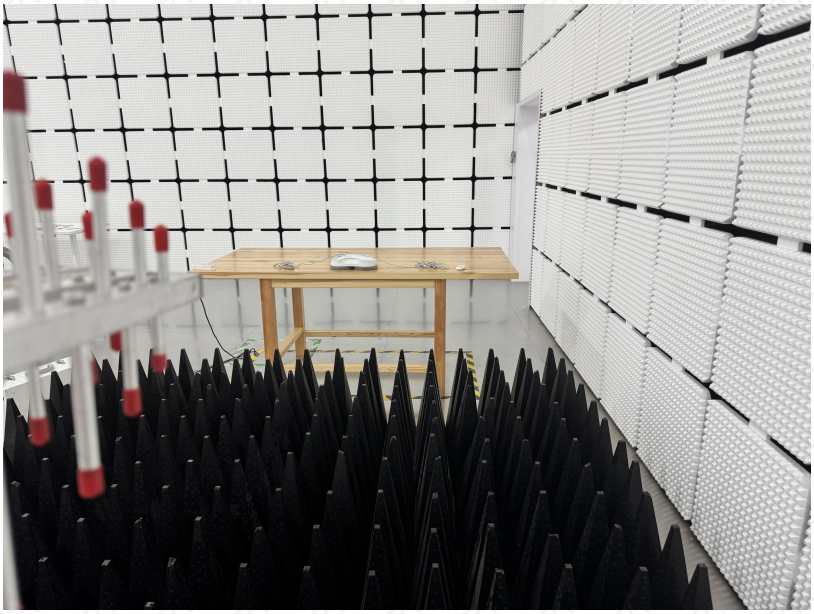

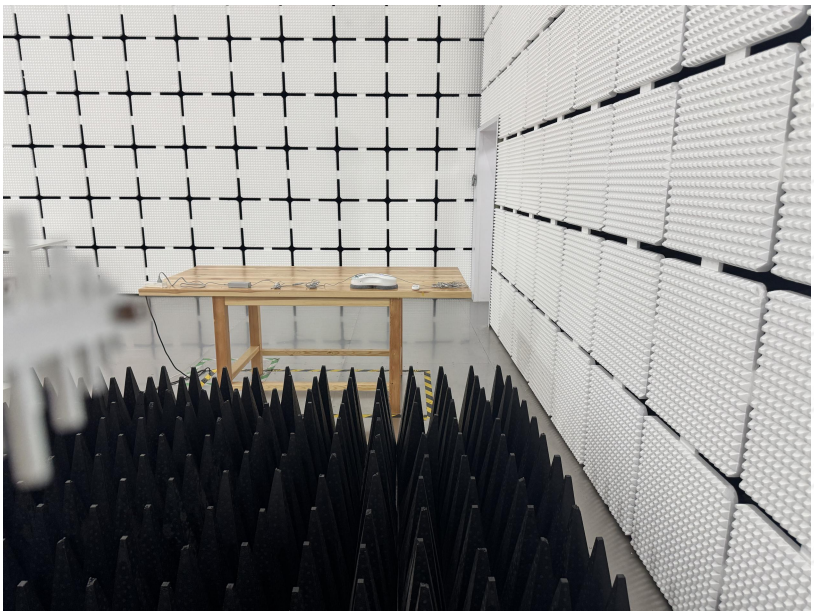

10. PHOTOGRAPHS OF EUT



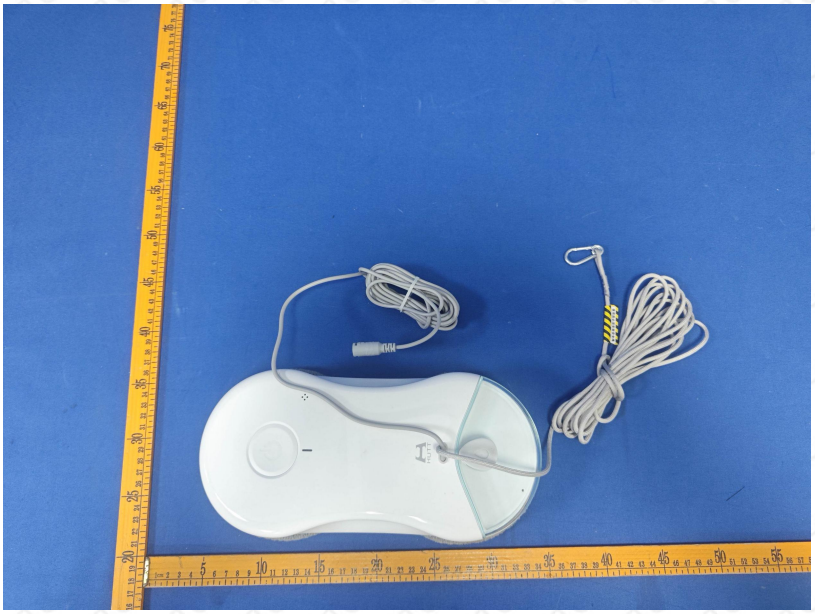

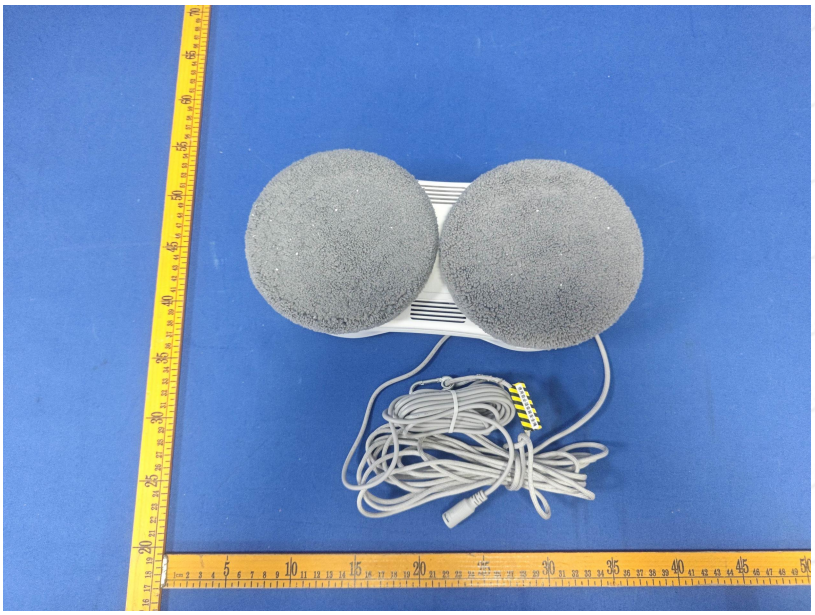



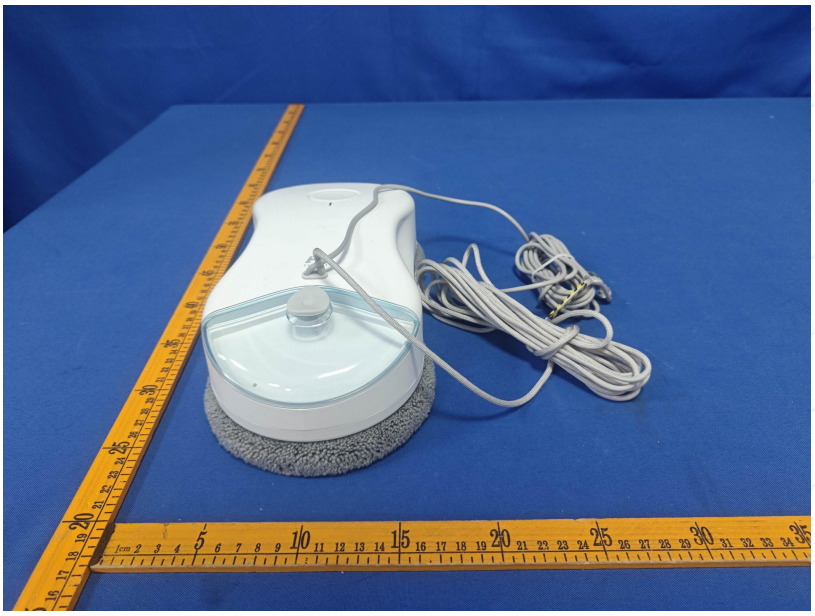





— End of report —